EATON | Cutler-Hammer

Intelligent Technologies

Eaton's Cutler-Hammer *IT*. IEC Contactor and Starter

A – F Frames User Manual

EATON | Cutler-Hammer

Publication No. MN03403002E
March 2002
NEW

March 2002

Important Notice – Please Read

The product discussed in this literature is subject to terms and conditions outlined in appropriate Eaton's Cutler-Hammer selling policies. The sole source governing the rights and remedies of any purchaser of this equipment is the relevant Eaton's Cutler-Hammer selling policy.

NO WARRANTIES, EXPRESS OR IMPLIED, INCLUDING WARRANTIES OF FITNESS FOR A PARTICULAR PURPOSE OR MERCHANTABILITY, OR WARRANTIES ARISING FROM COURSE OF DEALING OR USAGE OF TRADE, ARE MADE REGARDING THE INFORMATION, RECOMMENDATIONS AND DESCRIPTIONS CONTAINED HEREIN. In no event will Eaton's Cutler-Hammer be responsible to the purchaser or user in contract, in tort (including negligence), strict liability or otherwise for any special, indirect, incidental or consequential damage or loss whatsoever, including but not limited to damage or loss of use of equipment, plant or power system, cost of capital, loss of power, additional expenses in the use of existing power facilities, or claims against the purchaser or user by its customers resulting from the use of the information, recommendations and descriptions contained herein.

The information contained in this manual is subject to change without notice.

Cover Photo: Left — *IT.* IEC 45 mm Non-reversing Contactor — E111B32X3N
Right — *IT.* IEC 76 mm Non-reversing Starter — E101D10F3A

Table of Contents

PRODUCT OVERVIEW 1
Description 1
SAFETY 3
CATALOG NUMBERING SYSTEM 4
GENERAL APPEARANCE 5
INSTALLATION 6
Specifications 6
Mounting 7
Power Source 11
Technical Data 12
POWER WIRING INTRODUCTION 13
CONTROL WIRING — GENERAL 15
CONTROL WIRING — CONTACTORS 16
2-Wire Control Non-reversing — Contactor 16
2-Wire Control with Reversing — Contactor 17
3-Wire Control Non-reversing — Contactor 18
3-Wire Control with Reversing — Contactor 18
CONTROL WIRING — STARTERS 20
2-Wire Control Non-reversing — Starter 20
2-Wire Control with Reversing — Starter 21
3-Wire Control Non-reversing — Starter 22
3-Wire Control with Reversing — Starter 23
24V DC POWER SUPPLY SELECTION 24
Use of Multiple Contactors or Starters on One Power Supply 25
Simultaneous Operation of All Connected Contactors or Starters 25
Partial Operation of Some Contactors or Starters 26
***IT.* STARTER SETUP** 27
Overload FLA Setting 27
Overload Class Setting 28
Protective Trip 30
Phase Loss and Current Unbalance Protection 30
General 30
Phase Loss 30
Phase Current Unbalance 30
Overload Protection 31
Alarm without Trip Function 32
Trip Reset 32
Manual Reset 33
Remote Reset 33
Auto Reset 33
Reset Summary 33
Alarm Output 34
PROTECTION REQUIREMENTS 35
TROUBLESHOOTING AND MAINTENANCE 36
Renewal Parts 36
Control Terminal Block 36
Control Terminal Block Removal and Installation 37
Auxiliary Contacts 37
TEST Button Operation 39
Troubleshooting Chart 40
INTELLIGENT TECHNOLOGIES (*IT.*) PUBLICATIONS 43
STANDARDS CONFORMITY AND APPROVALS 44

List of Figures

Figure 1: Major *IT.* Contactor Mechanical Features (E111C50X3N) 5
Figure 2: Major *IT.* Starter Mechanical Features (E501B32J3A) 5
Figure 3: A Frame Non-reversing and Reversing Contactor 7
Figure 4: B & C Frames Non-reversing Contactor 8
Figure 5: D & E Frames Non-reversing Contactor and B – E Frames Non-reversing Starter 9
Figure 6: B – F Frames Reversing Contactor and Starter 10
Figure 7: F Frame Contactor and Starter 11
Figure 8: Typical Non-reversing Contactor 13
Figure 9: Typical Reversing Contactor 13
Figure 10: Typical Non-reversing Starter 13
Figure 11: Typical Reversing Starter 13
Figure 12: 2-Wire Control Non-reversing Contactor Terminal Connections 16
Figure 13: 2–Wire Control Reversing Contactor Terminal Connections — A Frame 17
Figure 14: 2–Wire Control Reversing Contactor Terminal Connections — B to E Frames 17
Figure 15: 2–Wire Control Reversing Contactor Terminal Connections — F Frame 17
Figure 16: 3-Wire Control Non-reversing Contactor Terminal Connections 18
Figure 17: 3-Wire Control Reversing Contactor Terminal Connections — A Frame 19
Figure 18: 3-Wire Control Reversing Contactor Terminal Connections — B to E Frames 19
Figure 19: 3–Wire Control Reversing Contactor Terminal Connections — F Frame 19
Figure 20: 2-Wire Control Non-reversing Starter Terminal Connections — B to E Frames 20
Figure 21: 2-Wire Control Non-reversing Starter Terminal Connections — F Frames 20
Figure 22: 2-Wire Control Reversing Starter Terminal Connections 21
Figure 23: 3–Wire Control Non-reversing Starter Terminal Connections — B to E Frames 22
Figure 24: 3–Wire Control Non-reversing Starter Terminal Connections — F Frame 22
Figure 25: 3-Wire Control Reversing Starter Terminal Connections 23
Figure 26: Overload Cover 27
Figure 27: FLA Setting 27
Figure 28: Overload Trip Curves 28
Figure 29: STATUS LED at 24V DC Power-Up — Phase Loss/Current Unbalance Enabled 28
Figure 30: STATUS LED at 24V DC Power-Up — Phase Loss/Current Unbalance Disabled 29
Figure 31: Class Setting 29
Figure 32: Phase Loss and Current Unbalance Trip Indication 30
Figure 33: Alarm Without Trip Jumper 32
Figure 34: Alarm Light 34
Figure 35: Alarm Relay 34
Figure 36: Removing the Terminal Block 37
Figure 37: Reinstalling the Terminal Block Auxiliary Contacts 37
Figure 38: Test Button Pushed Less Than 4 Seconds 39
Figure 39: Test Button Pushed Longer Than 4 Seconds 39

List of Tables

Table 1. Catalog Numbering System 4
Table 2. *IT.* Environmental Specifications 6
Table 3. Non-reversing and Reversing Contactors (Frame A) — Approximate Dimensions in mm [in] 7
Table 4. Non-reversing Contactors (Frames B & C) — Approximate Dimensions in mm [in] 8
Table 5. Non-reversing Contactors (Frames D & E) — Approximate Dimensions in mm [in] 9
Table 6. Non-reversing Starters (Frames B – E) — Approximate Dimensions in mm [in] 9
Table 7. Reversing Contactors and Starters (Frames B – E) — Approximate Dimensions in mm [in] 10
Table 8. Mounting Positions 11
Table 9. *IT.* Contactor and Starter Technical Data. 12
Table 10. L1, L2, L3, T1, T2 and T3 Power Wiring — 75°C Copper Wire Only 13
Table 11. Control Terminal Block Wire Size, Lug Torque and Tool Size 15
Table 12. Low Energy Pilot Device Contact Blocks. 16
Table 13. 24V DC Power Supply Requirements @20°C (68°F) 24
Table 14. Standard Power Supply Recommendations 25
Table 15. Thermal Estimate Status Indication 31
Table 16. Reset Summary. 33
Table 17. IEC Short Circuit Withstand Capability — Type 1 Coordination 35
Table 18. *IT.* Control Terminal Connectors 36
Table 19. Auxiliary Contact Availability — A to E Frames 38
Table 20. Auxiliary Contact Availability — F Frame 38
Table 21. Auxiliary Contact – Ratings 38
Table 22. EMA70 Auxiliary Contact Rating 38
Table 23. Troubleshooting 40
Table 24. *IT.* Publications 43

March 2002

Product Overview

Description

Cutler-Hammer Intelligent Technologies (*IT.*) Electromechanical products by Eaton Corporation are the result of a substantive engineering and marketing effort, involving extensive customer input, combined with new advances in solid-state technology. These products include greatly increased functionality, significantly reduced size, and utilize 24V DC control. The exclusive Pulse Width Modulation (PWM) controller generates the optimum DC level required for coil control, reducing energy requirements while resulting in the most compact system available. These products are available in several configurations including non-reversing and reversing contactors and starters.

An *IT.* IEC Electromechanical Contactor consists of an *IT.* Contact Block and a Coil Controller, which may be field assembled. Refer to the appropriate publication, if you will be field assembling.

The use of microprocessor-based control for the *IT.* Starter eliminates the need for seal in auxiliary contacts and provides overload, phase loss and phase current unbalance protection and an alarm output.

This manual provides installation guidelines for both *IT.* Contactors and Starters as well as adjustment procedures for the motor full load amp setting and overload Trip Class for the starter products.

Eaton's Cutler-Hammer *IT.* IEC Electromechanical Contactors and Starters include the following significant features:

- 24V DC control power, a safe reliable global standard
- Up to 40% smaller than typical electromagnetic equivalents
- Unique Pulse Width Modulated coil provides high efficiency and low energy consumption
- Wide operating temperature range of -40°C to 65°C [-40°F to 149°F]
- DIN rail or panel mounting for 6 amp to 100 amp products
- Highly accessible mounting feet for easy panel mounting
- Mounting plates with "ease of installation" slotted holes for 18 amp to 200 amp products
- Front mounted auxiliary interlocks
- Long-life silver nickel and silver tin contacts provide excellent conductivity and superior resistance to welding and arc erosion
- IP20 finger protection
- No laminations, shading coils or magnet noise
- Unique reversing control energizes both the forward and reverse contactors with only one wiring point
- Easy field assembly of control wiring
- No user wiring between the Overload or Coil Controller and the Contact Block
- Common product line accessories

IT. Starters include these additional features:

- Microprocessor based control
- Phase loss and current unbalance protection, user selectable
- Selectable Trip Class — 10, 20 or 30
- Ambient compensation
- Protection algorithm which simulates motor temperature
- Thermal Memory at power-up
- Running motor thermal capacity utilization indication
- Alarm Output
- Unique “Alarm without Trip” function for critical must run applications
- Lockable cover protects adjustment and reset functions
- LED indication for trip, overload status, motor thermal state, availability of reset and Trip Class setting
- Selectable Manual, Remote or Auto Reset
- Communication Interface

Safety

The following safety statements relate to the installation, setup and operation of Eaton's Cutler-Hammer *IT.* Contactors and Starters.

Notice

Make sure you read and understand the procedures in this manual before you attempt to operate or set up the equipment.

WARNING

This instruction manual should be used for proper installation, setup and operation of an *IT.* Contactor or Starter. Improperly installing and maintaining this product can result in serious personal injury or property damage. Before attempting installation, setup or operation, read and understand all of this manual.

WARNING

Hazardous voltage can cause electric shock and burns. Always disconnect power before proceeding with any work on this product.

CAUTION

Only apply 24V DC to any of the terminals of the Overload or Coil Controller terminal block. Use of any other voltage may result in personal injury, property damage and damage to the *IT*. Coil Controller or Overload.

WARNING

To provide continued protection against fire or shock hazard, the complete *IT*. Overload Relay section of the *IT*. Starter must be replaced if it becomes defective.

CAUTION

For reversing applications, the Forward input will always override a Reverse input, if both are closed. Caution must be exercised to prevent an unintended direction change.

Catalog Numbering System

The catalog numbering system used for *IT.* Contactors and Starters and the various other *IT.* electromechanical products is illustrated in **Table 1**. When ordering components for field assembly, care should be exercised to assure that the catalog number for the Overload Relay aligns with the *IT.* Contact Block selected for type, frame size and ampacity. An example of this would be the selection of an E05N_XR_3A *IT.* Overload Relay for a non-reversing application — see additional examples below.

Table 1. *IT.* IEC Catalog Numbering System

E 101 A 12 A 3 A

Standard

E = IEC

Configuration (Open Type)

02N = FVNR Coil Controller
03N = FVR Coil Controller
04N = Contact Block
05N = Solid-State Non-reversing Overload Relay
06N = Solid-State Reversing Overload Relay
071 = Stand-Alone Solid-State Overload Relay
101 = FVNR Starter
111 = FVNR Contactor
501 = FVR Starter
511 = FVR Contactor

Frame Size

A = 27 mm
B = 45 mm
C = 54 mm
D = 76 mm
E = 105 mm
F = 140 mm

Designator (IEC)

(A) **06** = 6 Amps. **09** = 9 Amps. **12** = 12 Amps.	(E) **12** = 125 Amps. **16** = 160 Amps. **20** = 200 Amps.
(B) **18** = 18 Amps. **25** = 25 Amps. **32** = 32 Amps.	(F) **25** = 250 Amps. **31** = 315 Amps. **40** = 400 Amps.
(C) **40** = 40 Amps. **50** = 50 Amps.	**XC** = Coil Controller **XR** = Overload
(D) **65** = 65 Amps. **85** = 85 Amps. **10** = 100 Amps.	

Overload Type

A = Standard
N = Contactor or Not Applicable

Pole Selection

3 = 3-Pole
N = Not Applicable

Overload Amperes Range

(27 mm) **A** = 0.25 – 0.8 **B** = 0.59 – 1.9 **C** = 1.4 – 4.4 **D** = 2.8 – 9.0 **E** = 3.8 – 12	(76 mm) **F** = 5.0 – 16 **H** = 8.4 – 27 **K** = 14 – 45 **N** = 31 – 100
(45 mm) **A** = 0.25 – 0.8 **B** = 0.59 – 1.9 **C** = 1.4 – 4.4 **D** = 2.8 – 9.0 **G** = 6.3 – 20 **J** = 10 – 32	(105 mm) **K** = 14 – 45 **M** = 28 – 90 **P** = 42 – 135 **R** = 63 – 200
(54 mm) **A** = 0.25 – 0.8 **B** = 0.59 – 1.9 **C** = 1.4 – 4.4 **D** = 2.8 – 9.0 **F** = 5.0 – 16 **H** = 8.4 – 27 **L** = 16 – 50	(140 mm) **P** = 42 – 135 **S** = 84 – 270 **T** = 125 – 400 **X** = Contact Block, Coil Controller, Contactor or Not Applicable

Examples:
E101B32J3A – Full Voltage Non-reversing, 32 Amp Starter with a 10 – 32 Amp Overload Range
E501D10K3A – Full Voltage Reversing, 100 Amp Starter with a 14 – 45 Amp Overload Range
E111F25X3N – Full Voltage Non-reversing, 250 Amp Contactor
E05NCXRL3A – Non-reversing Overload Relay with a 16 – 50 Amp Overload Range
E02NCXCXNN – Non-reversing Coil Controller 54 mm
E04NB18X3N – Contact Block 45 mm, 18 Amp

March 2002

General Appearance

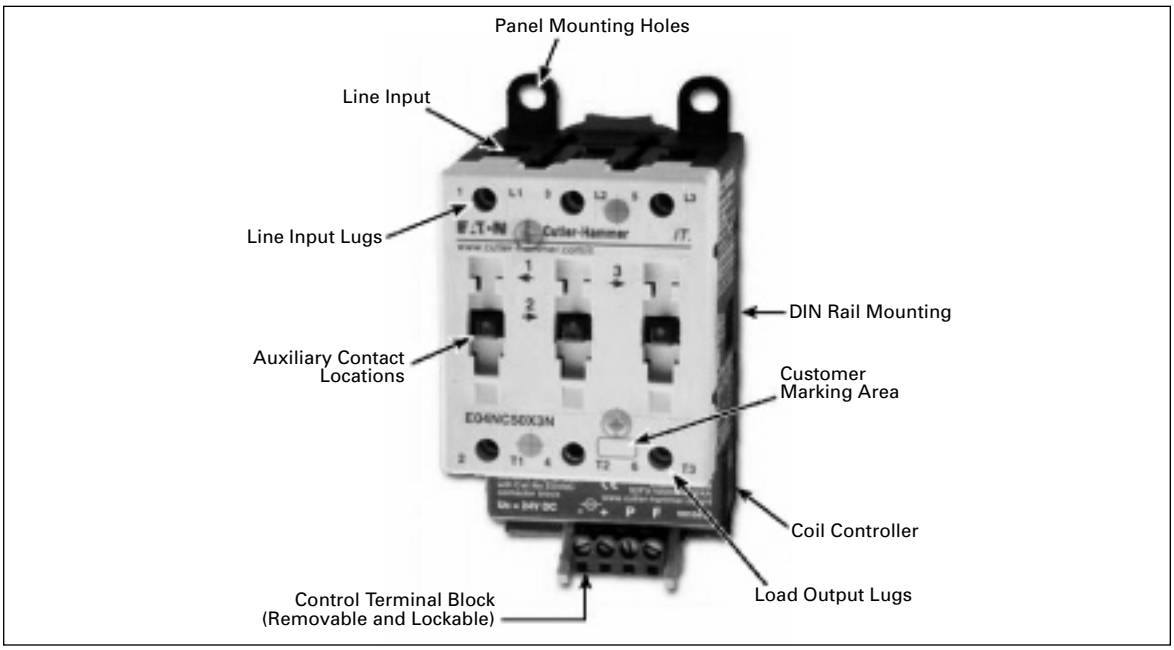

Figure 1: Major *IT.* Contactor Mechanical Features (E111C50X3N)

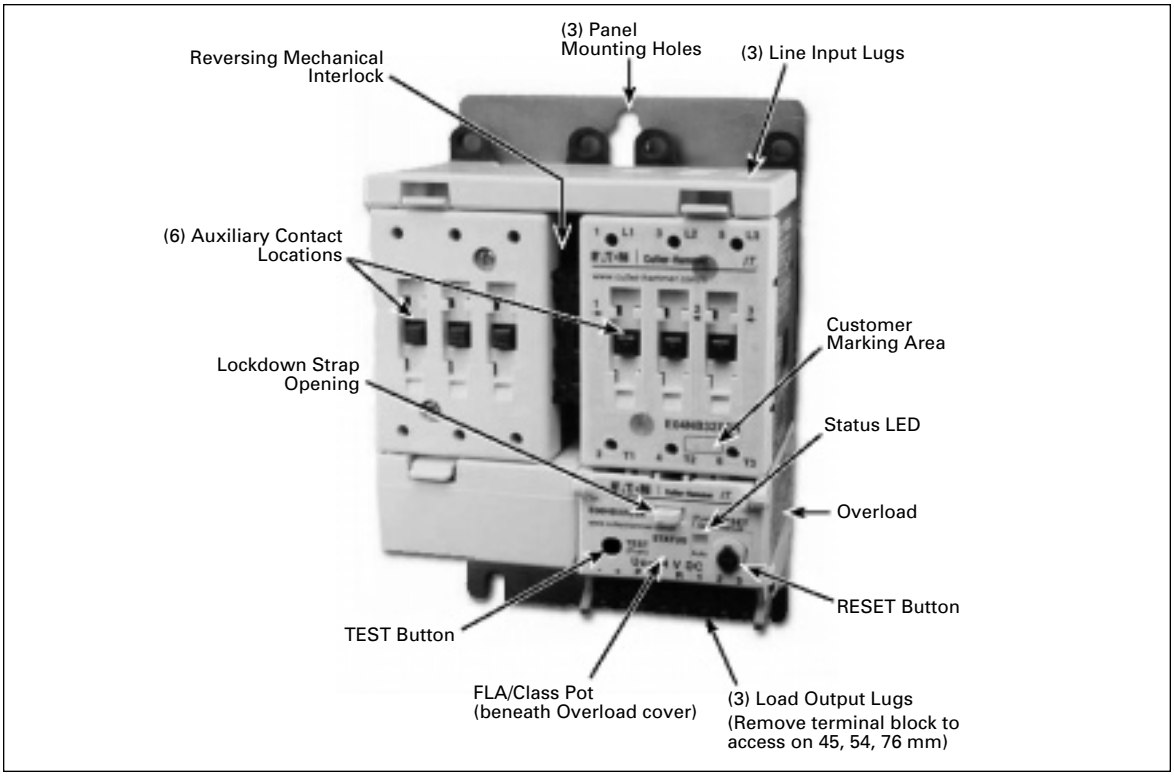

Figure 2: Major *IT.* Starter Mechanical Features (E501B32J3A)

Installation

Specifications

Table 2. *IT.* Environmental Specifications

Description	Specification
Transportation	
Temperature	-50°C to 80°C [-58°F to 176°F]
Humidity	95% non-condensing
Shock	15 g's half-wave sinusoidal 11 msecs
Vibration	5 – 57.5 Hz [100 – 17 msecs] @ 0.3 mm SA 57.5 – 150 Hz [17 – 6.7 msecs] @ 0.35 mm SA
Storage	
Temperature	-50°C to 80°C [-58°F to 176°F]
Humidity	95% non-condensing
Operating	
Temperature	-40°C to 65°C [-40°F to 149°F]
Humidity	95% non-condensing
Altitude	Above 2000 meters [6600 feet] consult factory
Shock IEC 60068-2-27	15 g's half-wave sinusoidal 11 msecs
Vibration IEC 60068-2-6	5 – 57.5 Hz (100 – 17 msecs) @ 0.3 mm SA 57.5 – 150 Hz (17 – 6.7 msecs) @ 0.35 mm SA
EMC Environment IEC 60947-4-1 & EN 60947-4-1	1
Pollution Degree IEC 60947-1	2
Protection Degree IEC 60947-1	IP20

March 2002

Mounting

Note: Specific frame outline drawings are available on-line at www.cutler-hammer.eaton.com/it

Table 3. Non-reversing and Reversing Contactors (Frame A) — Approximate Dimensions in mm [in]

Overall					Mounting Holes						Terminals		
Width	Height	Depth	Depth w/ Auxiliary	Depth added w/ DIN Rail	Width	Height	Mtg. Hole to Top	DIN Rail to Top	Req. Mtg. Screws ①②		Control	Line	Load
A	B	C	D	E	F	G	H	J	K	Torque	P	Q	R
Non-reversing													
27 [1.1]	75 [3.0]	60 [2.4]	88 [3.5]	5 [0.2]	19.2 [0.76]	67 [2.64]	3.5 [0.1]	15 [0.6]	(3) M4 #8	1.1 [10]	16 [0.6]	43 [1.7]	43 [1.7]
Reversing													
60 [2.4]	73 [2.9]	60 [2.4]	88 [3.5]	5 [0.2]	33.2 [1.31]	64 [2.52]	5 [0.2]	13 [0.5]	(3) M4 #8	1.1 [10]	16 [0.6]	43 [1.7]	43 [1.7]

① Pan head screws.
② Maximum torque is in Nm [lb-in].

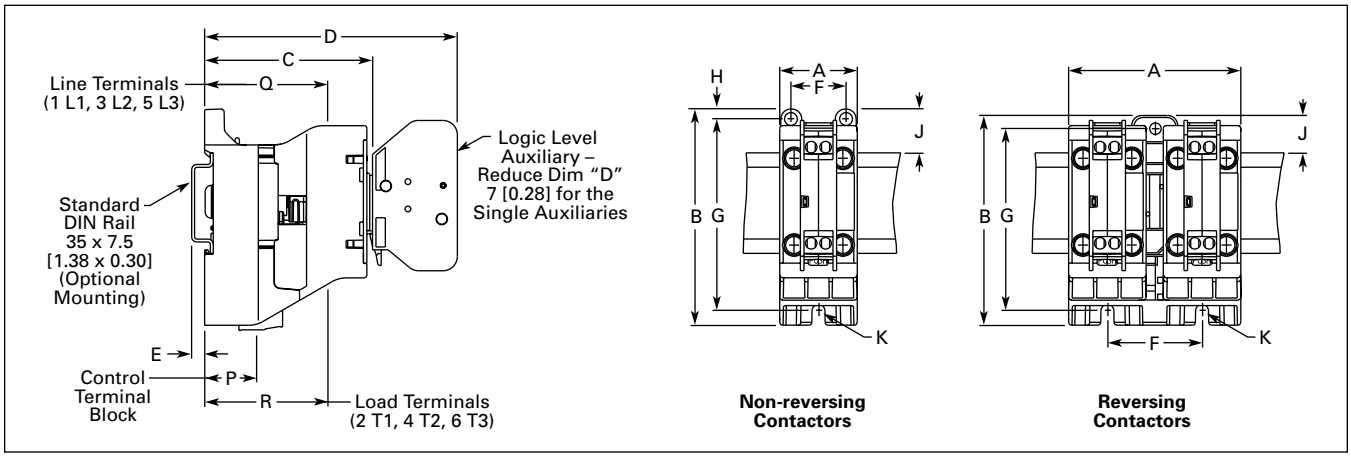

Figure 3: A Frame Non-reversing and Reversing Contactor

Table 4. Non-reversing Contactors (Frames B & C) — Approximate Dimensions in mm [in]

Overall					Mounting Holes						Terminals		
Width	Height	Depth	Depth w/ Auxiliary	Depth added w/ DIN Rail	Width	Height	Mtg. Hole to Top	DIN Rail to Top	Req. Mtg. Screws ①②		Control	Line	Load
A	B	C	D	E	F	G	H	J	K	Torque	P	Q	R
Frame B													
45 [1.8]	111 [4.4]	60 [2.4]	91 [3.6]	3 [0.1]	33.8 [1.33]	101 [4.0]	5 [0.2]	23 [0.9]	(3) M4 #8	1.1 [10]	19 [0.7]	30 [1.2]	30 [1.2]
Frame C													
54 [2.1]	113 [4.45]	60 [2.4]	91 [3.6]	3 [0.1]	37 [1.46]	104 [4.1]	5 [0.2]	20 [0.8]	(3) M4 #8	1.1 [10]	19 [0.7]	30 [1.2]	30 [1.2]

① Pan head screws.
② Maximum torque is in Nm [lb-in].

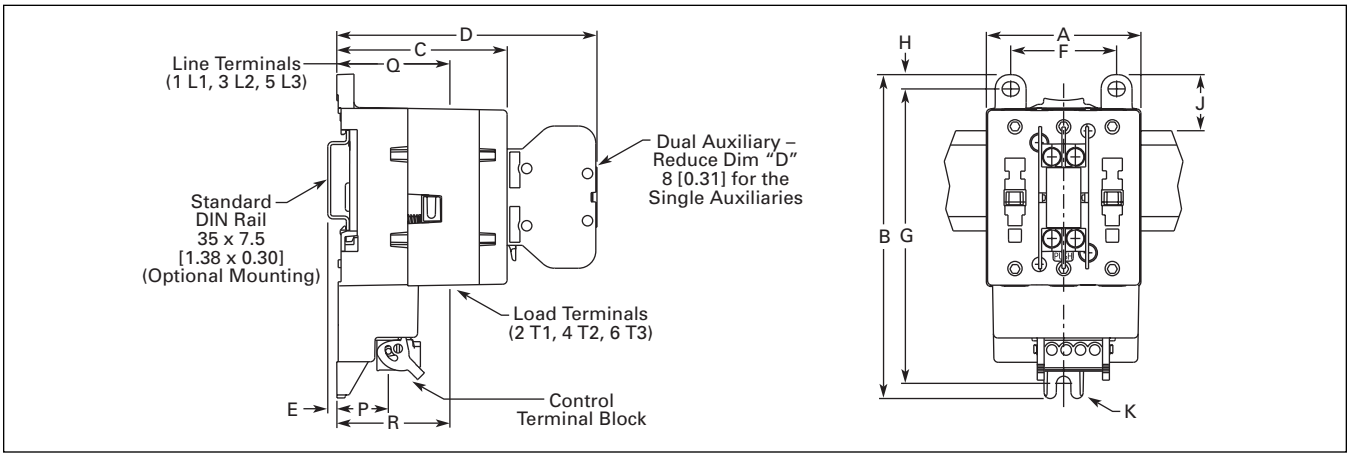

Figure 4: B & C Frames Non-reversing Contactor

March 2002

Table 5. Non-reversing Contactors (Frames D & E) — Approximate Dimensions in mm [in]

Overall					Mounting Holes						Terminals		
Width	Height	Depth	Depth w/ Auxiliary	Depth added w/ DIN Rail	Width	Height	Mtg. Hole to Top	DIN Rail to Top	Req. Mtg. Screws ①②		Control	Line	Load
A	B	C	D	E	F	G	H	J	K	Torque	P	Q	R
Frame D													
76 [3.0]	150 [5.9]	79 [3.1]	107 [4.2]	4 [0.2]	24 [0.94]	73 [2.87]	13 [0.5]	23 [0.9]	(4) M3.5 x 50 #6 x 2	1.7 [15]	60 [2.4]	37 [1.5]	14 [0.6]
Frame E													
105 [4.1]	203 [8.0]	90 [3.5]	119 [4.7]	—	33.8 [1.33]	105 [4.13]	15 [0.6]	—	(4) M4 x 40 #8 x 1.5	1.7 [15]	72 [2.8]	42 [1.7]	8 [0.3]

① Pan head screws.
② Maximum torque is in Nm [lb-in].

Table 6. Non-reversing Starters (Frames B – E) — Approximate Dimensions in mm [in]

Overall					Mounting Holes					Reset Button			Terminals		
Width	Height	Depth	Depth w/ Aux.	Depth added w DIN Rail	Width	Height	Mtg. Hole to Top	DIN Rail to Top	Req. Mtg. Screws ③④	Width	Height	Depth	Control	Line	Load
A	B	C	D	E	F	G	H	J	K	L	M	N	P	Q	R
Frame B															
45 [1.8]	127 [5.0]	63 [2.5]	91 [3.6]	3 [0.1]	33.8 [1.33]	117.3 [4.62]	5 [0.2]	23 [0.9]	(3) M4 #8	14 [0.6]	91 [3.6]	63 [2.5]	44 [1.7]	30 1.2	16 [0.6]
Frame C															
54 [2.1]	138 [5.4]	63 [2.5]	91 [3.6]	3 [0.1]	37 [1.46]	128 [5.04]	5 [0.2]	20 [0.8]	(3) M4 #8	17 [0.7]	93 [3.7]	62 [2.4]	45 [1.8]	30 1.2	8 [0.3]
Frame D															
76 [3.0]	150 [5.9]	79 [3.1]	107 [4.2]	4 [0.2]	24 [0.94]	73 [2.87]	13 [0.5]	23 [0.9]	(3) M3.5 x 50 #6 x 2	17 [0.7]	106 [4.2]	78 [3.1]	60 [2.4]	37 [1.5]	14 [0.6]
Frame E															
105 [4.1]	203 [8.0]	90 [3.5]	119 [4.7]	—	33.8 [1.33]	105 [4.13]	15 [0.6]	—	(3) M4 x 40 #8 x 1.5	17 [0.7]	146 [5.7]	88 [3.5]	72 [2.8]	42 [1.7]	8 [0.3]

③ Pan head screws.
④ Maximum torque is 1.7 Nm [15 lb-in].

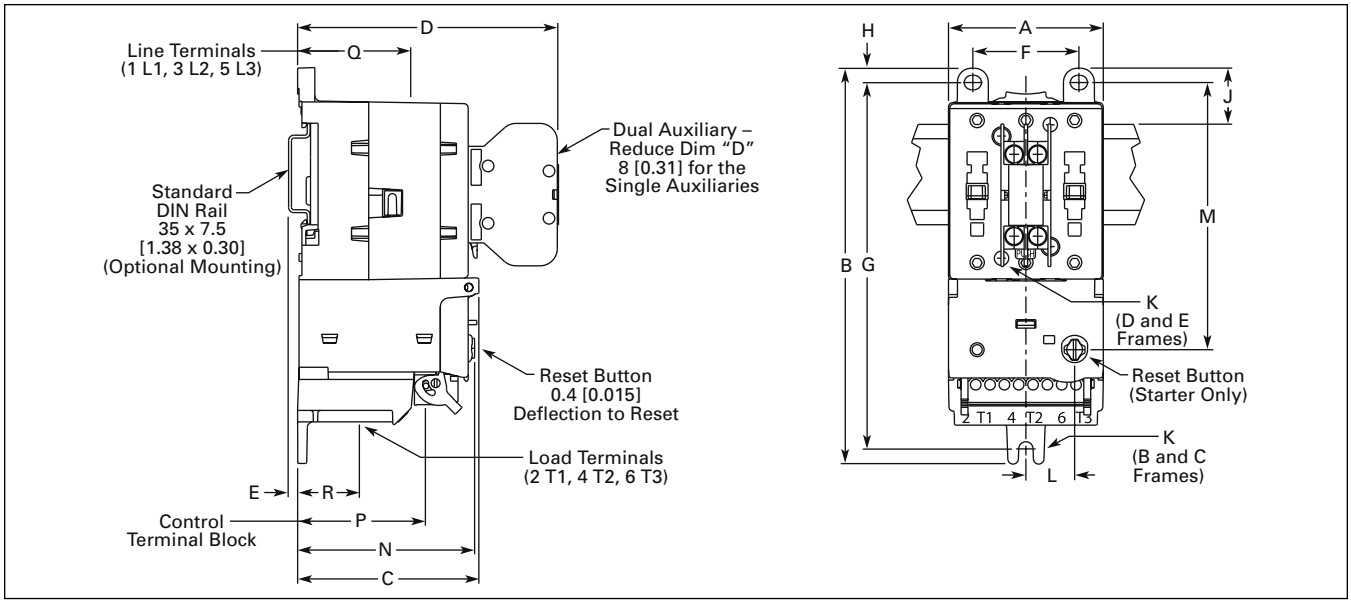

Figure 5: D & E Frames Non-reversing Contactor and B – E Frames Non-reversing Starter

Table 7. Reversing Contactors and Starters (Frames B – E) — Approximate Dimensions in mm [in]

Overall					Mounting Holes					Reset Button			Terminals		
Width	Height	Depth	Depth w/ Auxiliary	Depth added w/ DIN Rail	Width	Height	Mtg. Hole to Top	DIN Rail to Top	Req. Mtg. Screws	Width	Height	Depth	Control	Line	Load
A	B	C	D	E	F	G	H	J	K ①	L	M	N	P	Q	R
Frame B															
96 [3.8]	149 [5.9]	69 [2.7]	96 [3.8]	—	80 [3.15]	136 [5.35]	7 [0.28]	—	(3) M5 #10 ②	40 [1.6]	97 [3.8]	68 [2.7]	50 [2.0]	38 [1.5]	22 [0.9]
Frame C															
114 [4.5]	149 [5.9]	67 [2.6]	96 [3.8]	—	80 [3.15]	136 [5.35]	7 [0.28]	—	(3) M5 #10 ②	43 [1.7]	104 [4.1]	65 [2.6]	50 [2.0]	38 [1.5]	16 [0.6]
Frame D															
158 [6.2]	188 [7.4]	84 [3.3]	112 [4.4]	—	140 [5.51]	175 [6.89]	6 [0.24]	—	(3) M5 #10 ③	58 [2.3]	139 [5.5]	83 [3.3]	67 [2.6]	48 [1.9]	22 [0.9]
Frame E															
216 [8.5]	242 [9.5]	97 [3.8]	125 [4.9]	—	200 [7.87]	230 [9.06]	6 [0.24]	—	(3) M5 #10 ③	73 [2.9]	182 [7.2]	94 [3.7]	80 [3.1]	54 [2.1]	17 [0.7]

① Pan head screws.
② Maximum torque: 1.7 Nm [15 lb-in].
③ Maximum torque: 2.7 Nm [24 lb-in].

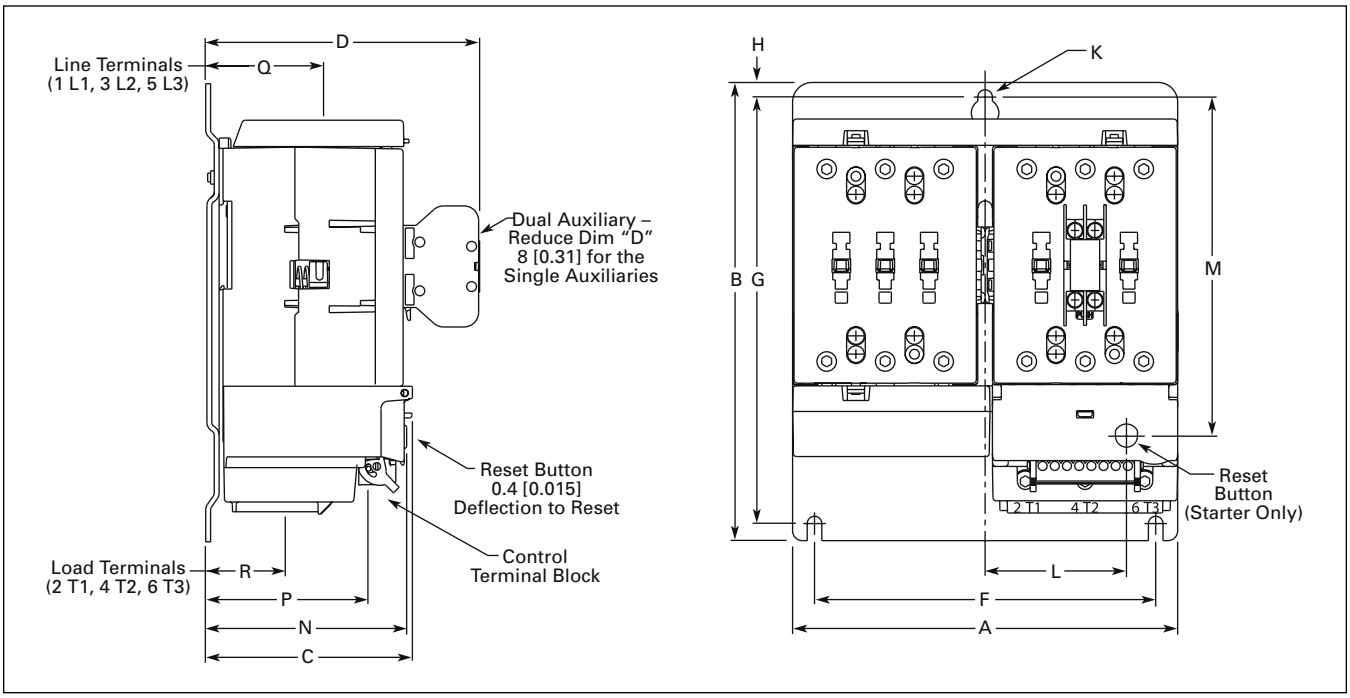

Figure 6: B – F Frames Reversing Contactor and Starter

F Frame Contactor and Starter
Consult factory for approximate dimensions.

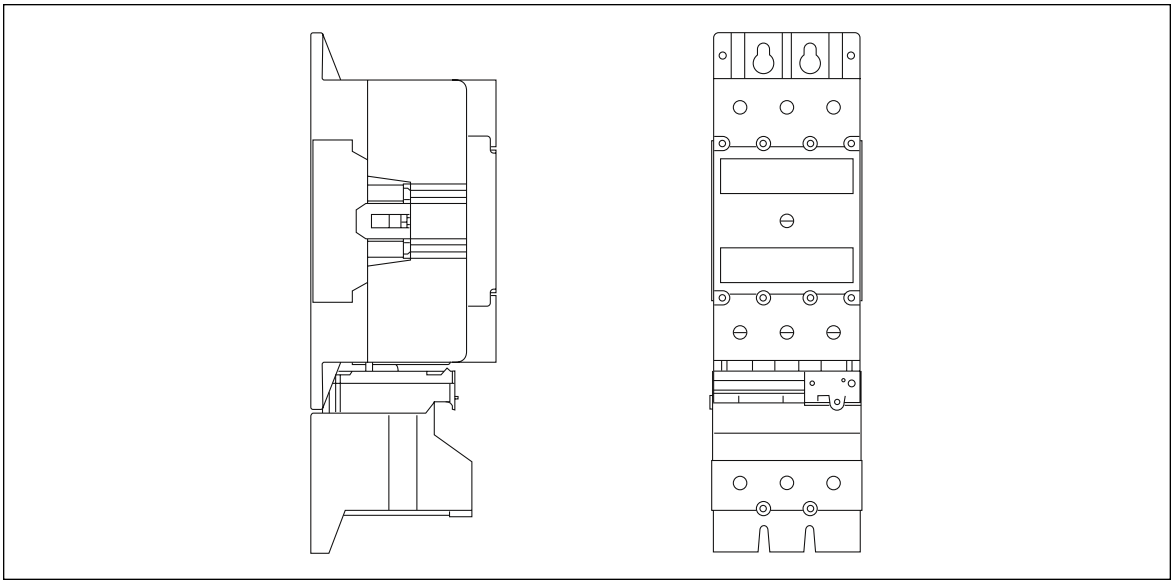

Figure 7: F Frame Contactor and Starter

Table 8. Mounting Positions

Frame Size	A – 27 mm	B – 45 mm	C – 54 mm	D – 76 mm	E – 105 mm	F – 140 mm
Panel-Vertical	Yes	Yes	Yes	Yes	Yes	Yes
Panel-Horizontal	Yes	Yes	Yes	Yes	Yes	Yes
DIN Rail Mountable	Yes	Yes ①	Yes ①	Yes ①	No	No

① Reversing Contactors and Starters are not DIN Rail Mountable.

Power Source

Eaton's Cutler-Hammer *IT.* Electromechanical Contactors and Starters are designed for use with three-phase line voltages of 200, 208, 230, 240, 380, 415, 460, 480, and 575 at a line frequency of 50 or 60 Hz. The *IT.* Contactor may be used in single-phase applications at 120 and 220 volts, but the *IT.* Starter is limited to three-phase applications.

IT. Contactors and Starters are suitable for installation, in combination with an appropriate protective device, on a circuit with a symmetrical rms fault current capability not exceeding that listed in the appropriate *IT.* Contactor or Starter instruction sheet and as summarized in **Table 17** of the *Protection Requirements* section of this manual.

IT. Contactors and Starters must be installed with upstream protection as required by national and local installation codes and rules.

Technical Data

Table 9. *IT.* Contactor and Starter Technical Data

Description		Frame Size					
		A – 27 mm	**B – 45 mm**	**C – 54 mm**	**D – 76 mm**	**E – 105 mm**	**F – 140 mm**
Insulation Voltage (U_i)		690V	690V	690V	690V	690V	690V
Impulse Withstand Voltage (U_{imp})		6 kV	6 kV	6 kV	6 kV	6 kV	6 kV
Current Ratings @ 480V max	AC-1 Max Thermal Current (I_{th})	20	50	85	130	250	①
	AC-3 Max Operating Current (I_e)	12	32	50	100	200	①
	AC-4 Max Operating Current (I_e)	10	32	50	100	150	①
Current Ratings @ 600V max	AC-1 Max Thermal Current (I_{th})	—	—	—	—	—	①
	AC-3 Max Operating Current (I_e)	—	—	—	—	—	①
	AC-4 Max Operating Current (I_e)	—	—	—	—	—	①
Maximum Mechanical Operating Rate (per second)		6	3	3	2	2	1
Finger Protection	Front	IP20	IP20	IP20	IP20	IP20	IP20
	At Terminals	IP20	IP10	IP10	IP00	IP00	IP00
	At Terminals with maximum size wire installed	IP20	IP20	IP10	IP10	IP00	IP00

① Consult factory.

March 2002

Power Wiring Introduction

The three AC line power connections are made to the *IT*. Contactor or Starter inputs marked 1, 3 and 5 and L1, L2 and L3. The three motor power connections are made directly to the *IT*. Contactor outputs or to the *IT*. Overload Relay outputs for the *IT*. Starter to the terminals marked 2, 4 and 6 and T1, T2 and T3. Examples are shown in **Figures 8** through **11**. Refer to the Publication section of this manual for specific *Installation Guide* for the *IT*. product to be wired. Use class B, 75°C copper wire only (or 90°C copper wire oversized for 75°C operation) in accordance with the National Electric Code (NEC) and other local regulations as applicable. Note that the control terminal block must be removed before wiring the T1, T2 and T3 leads of the B, C and D Starter Frames.

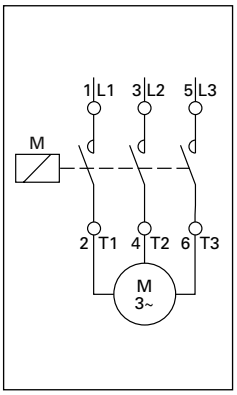

Figure 8: Typical Non-reversing Contactor

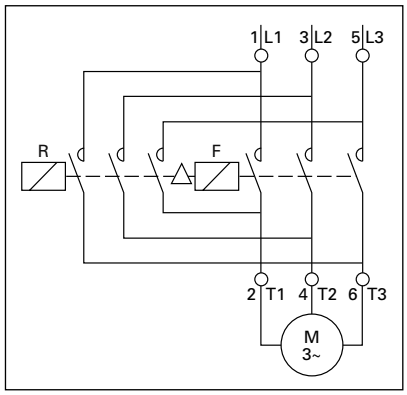

Figure 9: Typical Reversing Contactor

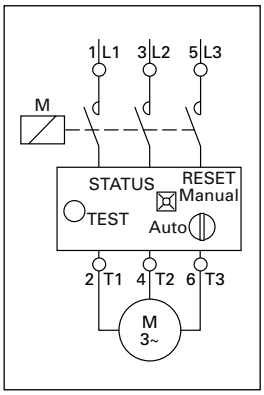

Figure 10: Typical Non-reversing Starter

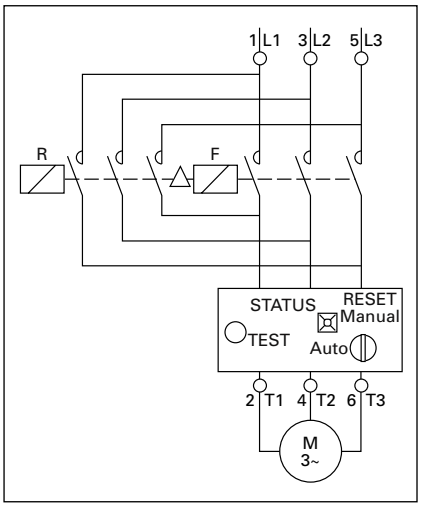

Figure 11: Typical Reversing Starter

The wire size ranges, lug torques and tool types for these connections are shown in **Table 10**.

Table 10. L1, L2, L3, T1, T2 and T3 Power Wiring — 75°C Copper Wire Only

Wire Size Range mm² [AWG]	Torque		Wire Strip Length	Terminal Type	Tool
	Nm [lb-in.]	Wire Size mm² [AWG]			
Catalog No. E111A_ _X3N ①, Frame A, 27 mm					
1 or 2 of 1.5-2.5 [16-12]	2.0 [18]	All	8 mm [0.32 in]	Back-out Self Lifting Pressure Plates ④	Slotted [3/16 in.] PZ1
Catalog No. E511A_ _X3N ①, Frame A, 27 mm					
1 of 1.5-2.5 [16-12]	2.0 [18]	All	8 mm [0.32 in]	Back-out Self Lifting Pressure Plates ④	Slotted [3/16 in.] PZ1
Catalog No. E_ _1B_ _ _3_ ①, Frame B ②, 45 mm					
1 of 1.5-10 [14-8] or 2 of 1.5-4 [14-10]	2.2 [20]	1.5-6 [14-10]	11 mm [0.45 in]	Box Lug Pressure Type ⑤	2.5 mm Hex Key
	2.8 [25]	10 [8]			
Catalog No. E_ _1C_ _ _3_ ①, Frame C ②, 54 mm					
1 of 1.5-16 [14-4] or 2 of 1.5-16 [14-6]	4.0 [35]	1.5-6 [14-10]	12 mm [0.5 in]	Box Lug Pressure Type ⑤	3 mm Hex Key
	4.5 [40]	10 [8]			
	5.0 [45]	16 [6-4]			
Catalog No. E_ _1D_ _ _3_ ①, Frame D ②, 76 mm					
1.5-35 [14-1] or 2 of 1.5-25 [14-2]	5.0 [45]	All	18 mm [0.7 in]	Box Lug Pressure Type ⑥	4 mm Hex Key [5/32 in.]
Catalog No. E_ _1E_ _ _3_ ①, Frame E ③, 105 mm					
16-120 [6-250MCM] or 2 of 16-70 [6-3/0]	28 [250]	All	21 mm [0.8 in]	Box Lug Pressure Type ⑦	8 mm Hex Key [5/16 in.]
Catalog No. E_ _ _F_ _ _3_ ①, Frame F, 140 mm					
16-300 [4-600MCM] or 2 of 16-120 [4-250MCM]	62 [550]	All	40 mm [1.5]	Box Lug Pressure Type ⑦	8 mm Hex Key [5/16 in.]

① _ indicates that the missing digit of the catalog number may have multiple values.
② The control terminal block must be removed before wiring the T1, T2 and T3 leads of the B, C and D Frames.
③ Remove line and load lug covers on the 105 mm contactor and line lug cover on starter before wiring L1, L2, L3, T1, T2 and T3.
④ Lug terminals — brass, lug screws — steel w/zinc and yellow chromate.
⑤ Lugs — copper/tin plated, lug screws — steel/zinc plated.
⑥ Lugs — stainless steel, lug screws — steel/zinc plated.
⑦ Lugs — aluminum/tin plated, lug screws — aluminum.

Control Wiring — General

All of the control connections, including the contactor coil, are made to the *IT.* Coil Controller or Overload Relay terminal block. For the *IT.* Contactor frames A (27 mm) to C (54 mm), a four point terminal block is used for all non-reversing applications. For reversing contactors an eight point terminal block is used but the terminals marked 1, 2 and 3 are unused, except for the A frame which uses a single five point terminal block and the F frame which uses multiple five point terminal blocks. See **Table 18** for the complete listing of terminal block configurations.

For the *IT.* B through F frame Starters, an eight point terminal block is supplied for reversing and non-reversing applications. The difference is the use of the "R" terminal for the reversing starter. For a non-reversing application, this terminal is marked but unused. The F frame Starter also uses a five point terminal block.

The functions of the various terminals will be described later in this manual. This section describes the requirements for the connections to each of these terminals. When required, control wiring requirements for AC-4 applications are the same as for AC-3 applications.

Control wire size ranges, lug torques and tool types are shown in **Table 11**.

Note: The wire used for the – and + 24V DC power supply connections to the *IT.* Coil Controller and Overload Relay terminal blocks should take into account voltage drop due to coil inrush requirements. Refer to the application note on 24V DC Voltage Drop, available on-line at www.cutler.hammer.com/it. Typically 24V DC control power supplies require some form of grounding. Refer to the control power supply instruction guide for proper installation information.

Table 11. Control Terminal Block Wire Size, Lug Torque and Tool Size

Control Terminal Block Wiring — All Types and Sizes of Contactors and Starters					
Wire Size Range — mm² [AWG]			Torque Nm [lb-in.]	Terminal Type	Tool
P, F, R, 1, 2, 3 ①	(-) & (+)	Strip Length			
1 of 0.5 – 2.5 [22 – 12] or 2 of 0.75 – 1.5 [18 – 14]	1 of 1.5-2.5 [14-12] or 2 of 1.5 [14]	7 mm [0.25 in]	0.5 [4.5]	Box Lug Pressure Type	① Slotted 3.5 mm [1/8 in.]

① When present.

Control Wiring — Contactors

2-Wire Control Non-reversing — Contactor

Figure 12 illustrates the terminal connections for non-reversing 2-wire control. The ON/OFF control pilot device must be rated for use with a 24V DC low current (3 mA DC) dry circuit to assure reliable operation. See **Table 12** for recommendations.

An E-stop maintained contact is optional for installations requiring the removal of power from the control circuitry to open the contactor independently of the normal ON/OFF circuit. Caution must be exercised to assure that the E-stop contact is not closed when the ON/OFF control pilot device is already closed to prevent an unintended restart.

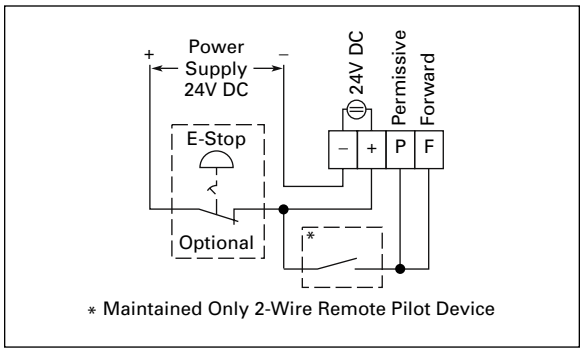

Figure 12: 2-Wire Control Non-reversing Contactor Terminal Connections

Table 12. Low Energy Pilot Device Contact Blocks

Pilot Device Recommended Cutler-Hammer Contact Blocks	
Catalog Number	**Circuit**
E22B1E E22B2E E30KLAE1	1NC 1NO 1NO
E30KLAE2 E30KLAE3 E30KLAE4 E30KLAE5	1NC 1NO, 1NC 2NO 2NC
10250T51E 10250T53E 10250T1E 10250T3E 10250T2E	1NC 1NO 1NO, 1NC 2NC 2NO

Note: Contact blocks with reliability “nibs” are also suitable.

2-Wire Control with Reversing — Contactor

⚠ CAUTION

For reversing applications, the Forward input will always override a Reverse input, if both are closed. Caution must be exercised to prevent an unintended direction change.

The wiring for 2-wire control with reversing is similar to the non-reversing version, with the use of a FORWARD/STOP/REVERSE pilot device or similar control contacts. This device is to be connected as shown in **Figure 13** for the A frame, **Figure 14** for the B to E frames, and **Figure 15** for the F frame. The contacts must be rated for use with a 24V DC low current (3 mA DC) dry circuit to assure reliable operation. See **Table 12** for recommendations.

An E-stop maintained contact is optional for installations requiring the removal of power from the control circuitry to open the contactor independently of the normal stop pilot device. Caution must be exercised to assure that the E-stop contact is not closed when the FORWARD/STOP/REVERSE control pilot device is already closed to prevent an unintended restart.

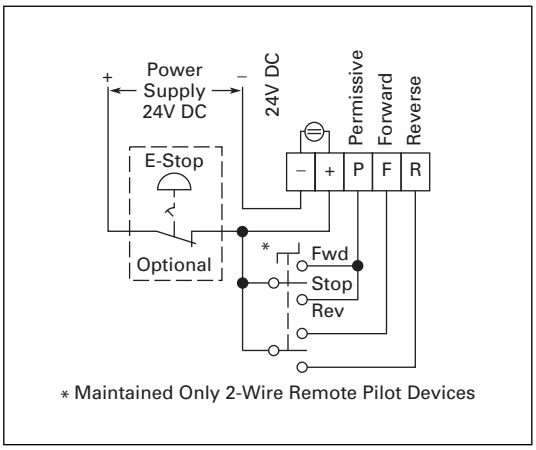

Figure 13: 2–Wire Control Reversing Contactor Terminal Connections — A Frame

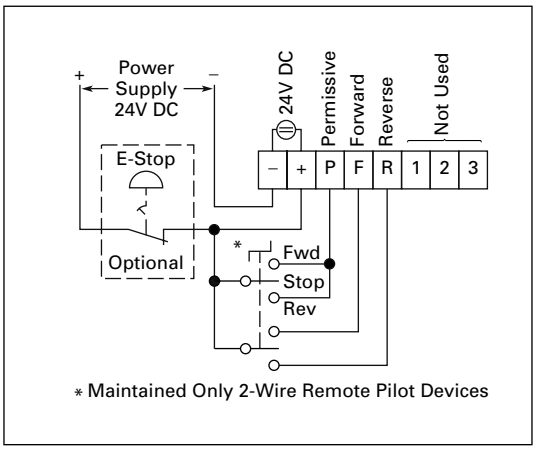

Figure 14: 2–Wire Control Reversing Contactor Terminal Connections — B to E Frames

Consult Factory

Figure 15: 2–Wire Control Reversing Contactor Terminal Connections — F Frame

3-Wire Control Non-reversing — Contactor

Figure 16 illustrates the terminal connections for 3-wire control. In 3-wire control a normally open Start contact is closed to cause the contactor to close. The Start contact is then released and has no further impact on operation. To open the contactor, the normally closed Stop contact is opened. This disconnects the coil power and opens the contactor. The Start and Stop contacts must be rated for use with a 24V DC low current (3 mA DC) dry circuit to assure reliable operation. See **Table 12** for recommendations.

An E-stop maintained pushbutton is optional for installations requiring the removal of power from the control circuitry to open the contactor independently of the normal stop circuit. Caution must be exercised to assure that the E-stop contact is not closed when the start circuit is already closed to prevent an unintended restart.

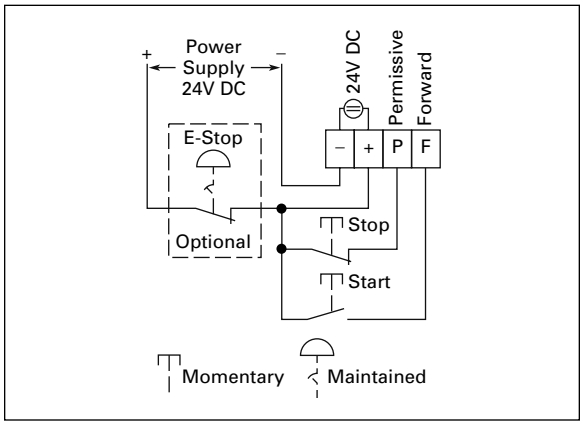

Figure 16: 3-Wire Control Non-reversing Contactor Terminal Connections

3-Wire Control with Reversing — Contactor

⚠ CAUTION

For reversing applications, the Forward input will always override a Reverse input, if both are closed. Caution must be exercised to prevent an unintended direction change.

3-wire control with reversing wiring for the *IT.* Contactor is shown in **Figure 17** for the A frame, **Figure 18** for the B to E frames, and **Figure 19** for the F frame. Upon closure of the Forward or Reverse contact, the *IT.* Contactor will close for the chosen direction. To open the contactor, the normally closed Stop contact is opened. This disconnects the coil power and opens the contactor. The Forward, Reverse and Stop contacts must be rated for use with a 24V DC low current (3 mA DC) dry circuit to assure reliable operation. See **Table 12** for recommendations.

An E-stop maintained pushbutton is optional for installations requiring the removal of power from the control circuitry to open the contactor independently of the normal stop circuit. Caution must be exercised to assure that the E-stop contact is not closed when the Forward or Reverse circuit is already closed to prevent an unintended restart.

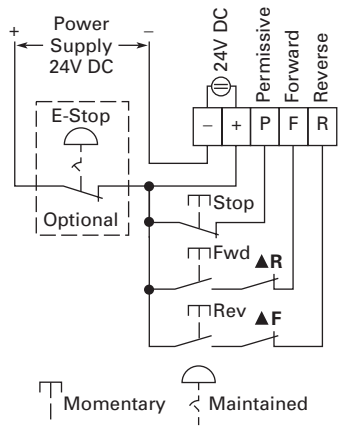

▲FORWARD – STOP – REVERSE
Optional auxiliaries **R** & **F** are needed if a stop command is required before changing the motor direction.

R = NC logic level auxiliary contact (EMA70) attached to the reversing contactor.

F = NC logic level auxiliary contact (EMA70) attached to the forward contactor.

Figure 17: 3-Wire Control Reversing Contactor Terminal Connections — A Frame

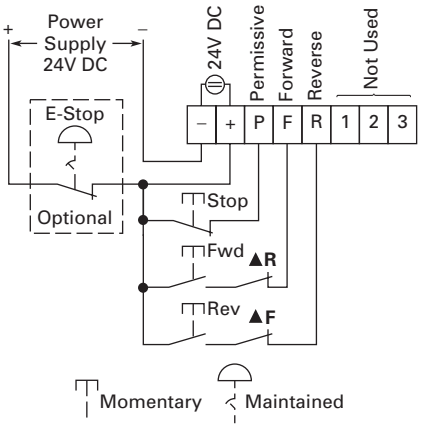

▲FORWARD – STOP – REVERSE
Optional auxiliaries **R** & **F** are needed if a stop command is required before changing the motor direction.

R = NC logic level auxiliary contact (EMA70) attached to the reversing contactor.

F = NC logic level auxiliary contact (EMA70) attached to the forward contactor.

Figure 18: 3-Wire Control Reversing Contactor Terminal Connections — B to E Frames

Consult Factory

Figure 19: 3-Wire Control Reversing Contactor Terminal Connections — F Frame

Control Wiring — Starters

2-Wire Control Non-reversing — Starter

⚠ CAUTION

When using the Auto Reset, Remote Reset or E-stop features, caution must be exercised to prevent an unintended restart from causing personal injury or equipment damage.

Figure 20 illustrates the terminal connections for the eight point terminal connections for the B, C, D and E starter frames and **Figure 21** for the F frame multi-block. The ON/OFF control pilot device must be rated for use with a 24V DC low current (3 mA DC) dry circuit to assure reliable operation. See **Table 12** for recommendations.

A remote Trip Reset contact (see **Table 12**) may be used, if desired, to reset the *IT.* Starter after a trip. Caution must be exercised to assure that the ON/OFF control pilot device is not closed to prevent an unintended restart. Refer to the Protective Trip and Trip Reset sections for further information on the Remote Reset feature. If the Auto Reset feature is used, caution must be exercised to assure that any restart occurs in a safe manner. A solid-state alarm output is available, see the Alarm Output section for information.

An E-stop maintained contact is optional for installations requiring the removal of power from the control circuitry to open the starter independently of the normal stop pilot device. Caution must be exercised to assure that the E-stop contact is not closed when the ON/OFF control pilot device is already closed to prevent an unintended restart.

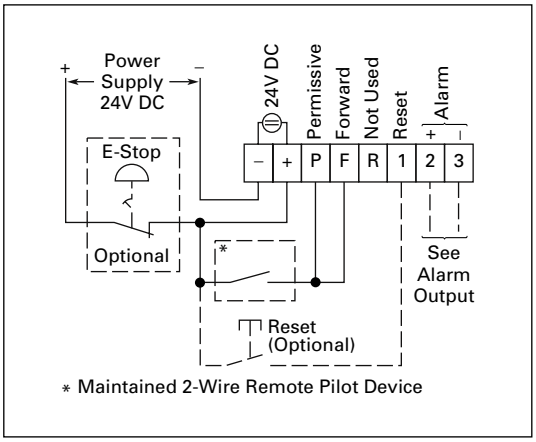

Figure 20: 2-Wire Control Non-reversing Starter Terminal Connections — B to E Frames

Consult Factory

Figure 21: 2-Wire Control Non-reversing Starter Terminal Connections — F Frames

March 2002

2-Wire Control with Reversing — Starter

CAUTION

When using the Auto Reset, Remote Reset or E-stop features, caution must be exercised to prevent an unintended restart from causing personal injury or equipment damage.

CAUTION

For reversing applications, the Forward input will always override a Reverse input, if both are closed. Caution must be exercised to prevent an unintended direction change.

The wiring for 2-wire control with reversing is similar to the non-reversing version, with the use of a FORWARD/STOP/REVERSE pilot device or control contacts. This pilot device is to be connected as shown in **Figure 22**. The contacts must be rated for use with a 24V DC low current (3 mA DC) dry circuit to assure reliable operation. See **Table 12** for recommendations.

A remote Trip Reset contact (see **Table 12**) may be used, if desired, to reset the *IT.* Starter after a trip. Caution must be exercised to assure that the Forward or Reverse control pilot device is not closed to prevent an unintended restart. Refer to the Protective Trip and Trip Reset sections for further information on the Remote Reset feature. If the Auto Reset feature is used, caution must be exercised to assure that any restart occurs in a safe manner. A solid-state alarm output is available, see the Alarm Output section for information.

An E-stop maintained contact is optional for installations requiring the removal of power from the control circuitry to open the starter independently of the normal stop pilot device. Caution must be exercised to assure that the E-stop contact is not closed when the Forward or Reverse control pilot device is closed to prevent an unintended restart.

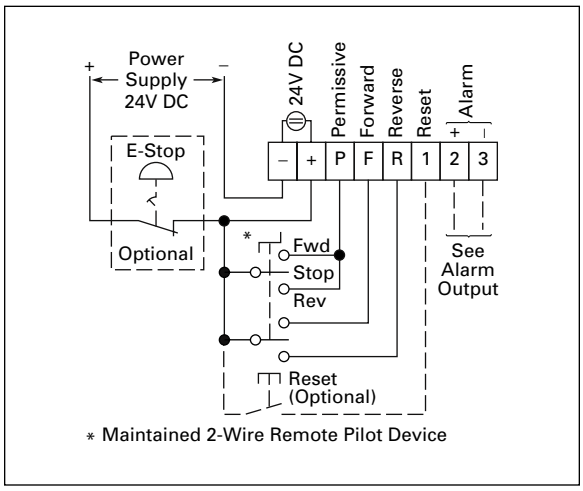

Figure 22: 2-Wire Control Reversing Starter Terminal Connections

3-Wire Control Non-reversing — Starter

⚠ CAUTION

When using the Auto Reset, Remote Reset or E-stop features, caution must be exercised to prevent an unintended restart from causing personal injury or equipment damage.

Figure 23 illustrates the terminal connections for the eight point terminal connections for the B, C, D and E frames, and **Figure 24** illustrates the F frame connections. The Start and Stop contacts must be rated for use with a 24V DC low current (3 mA DC) dry circuit to assure reliable operation. See **Table 12** for recommendations.

A remote Trip Reset contact (see **Table 12**) may be used, if desired, to reset the *IT.* Starter after a trip. Caution must be exercised to assure that the Start contact is not closed to prevent an unintended restart. Refer to the Protective Trip and Trip Reset sections for further information on the Remote Reset feature. If the Auto Reset feature is used, caution must be exercised to assure that any restart occurs in a safe manner. A solid-state alarm output is available, see the Alarm Output section for information.

An E-stop maintained pushbutton is optional for installations requiring the removal of power from the control circuitry to open the starter independently of the normal stop circuit. Caution must be exercised to assure that the E-stop contact is not closed when the Start contact is closed to prevent an unintended restart.

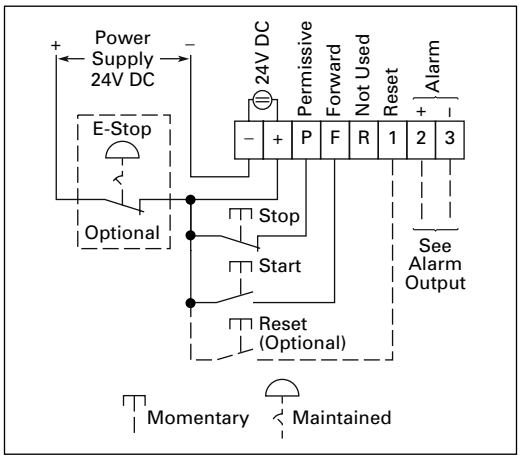

Figure 23: 3-Wire Control Non-reversing Starter Terminal Connections — B to E Frames

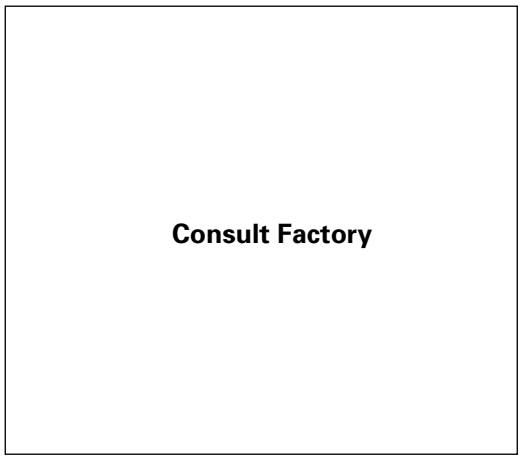

Figure 24: 3-Wire Control Non-reversing Starter Terminal Connections — F Frame

3-Wire Control with Reversing — Starter

⚠ CAUTION

When using the Auto Reset, Remote Reset or E-stop features, caution must be exercised to prevent an unintended restart from causing personal injury or equipment damage.

⚠ CAUTION

For reversing applications, the Forward input will always override a Reverse input, if both are closed. Caution must be exercised to prevent an unintended direction change.

3-wire control with reversing wiring for the *IT.* Starter is shown in **Figure 25**. The Forward, Reverse and Stop contacts must be rated for use with a 24V DC low current (3 mA DC) dry circuit to assure reliable operation. See **Table 12** for recommendations.

A remote Trip Reset contact (see **Table 12**) may be used, if desired, to reset the *IT.* Starter after a trip. Caution must be exercised to assure that the Forward or Reverse contact is not closed to prevent an unintended restart. Refer to the Protective Trip and Trip Reset sections for further information on the Remote Reset feature. If the Auto Reset feature is used, caution must be exercised to assure that any restart occurs in a safe manner. A solid-state alarm output is available, see the Alarm Output section for information.

An E-stop maintained contact is optional for installations requiring the removal of power from the control circuitry to open the starter independently of the normal stop circuit. Caution must be exercised to assure that the E-stop contact is not closed when the Forward or Reverse contact is already closed to prevent an unintended restart.

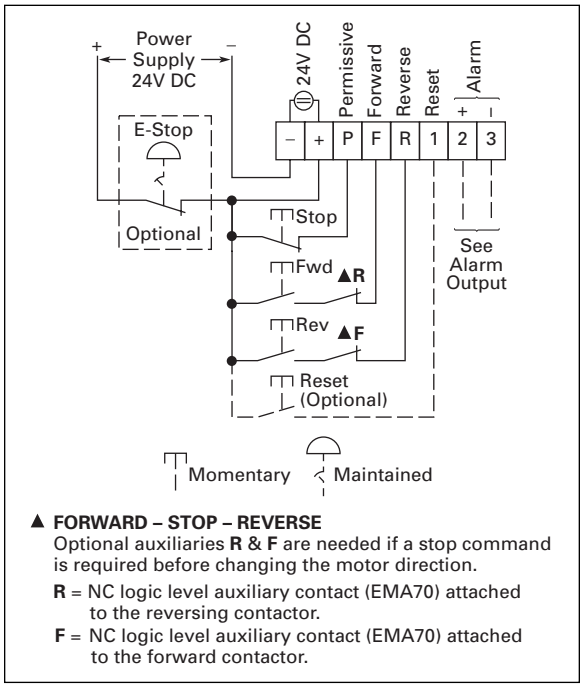

Figure 25: 3-Wire Control Reversing Starter Terminal Connections

24V DC Power Supply Selection

The *IT.* Coil Controller, Overload Relay and Contact Block coil require 24V DC control power.

Control wire size ranges, lug torques and tool types are shown in Table 9.

Note: The wire used for the – and + 24V DC power supply connections to the *IT.* Coil Controller and Overload Relay terminal blocks should take into account voltage drop due to coil inrush requirements. Refer to the application note on 24V DC Voltage Drop, available on-line at www.cutler.hammer.com/it. Typically 24V DC control power supplies require some form of grounding. Refer to the control power supply instruction guide for proper installation information.

Wire size ranges, lug torques and tool types were previously listed in **Table 11**.

⚠ CAUTION

Only apply 24V DC to any of the terminals of the *IT.* Coil Controller or *IT.* Overload control terminal block. Use of any other voltage may result in personal injury, property damage, and will damage the *IT.* device.

The power supply selected must meet the **sealed in** and **inrush** characteristics as outlined in **Table 13**.

Table 13. 24V DC Power Supply Requirements @20°C (68°F) See Note

Contactor/Starter Size			Sealed In		Inrush		
Catalog No. ①	**Size**	**Width (mm)**	**Wattage**	**Amps**	**Wattage**	**Amps**	**Duration (msecs)**
E_11A_ _X3N	A	27	1.3	0.054	20	0.83	30
E_11B_ _X3N	B	45	3.7	0.15	80	3.3	50
E_01B_ _ _3A	B	45	3.2	0.13	80	3.3	50
E_11C_ _X3N	C	54	4.2	0.18	90	3.8	50
E_01C_ _ _3A	C	54	3.6	0.15	90	3.8	50
E_ _1D_ _ _3_	D	76	5.0	0.21	130	5.4	65
E_ _1E_ _ _3_	E	105	5.6	0.23	140	5.8	85
E_ _1F_ _ _3_	F	140	②	②	②	②	②

Note: At other temperatures expressed in °C, for either inrush or sealed, use the 20°C value from the table in the following:

$$\text{Watts} = W_{20}[1.1\text{-}0.005(T)] \quad \text{and Amps} = A_{20}[1.1\text{-}0.005(T)]$$

For example, inrush requirements for a D frame starter at -25°C would be:

$$\text{Watts} = 130[1.1\text{-}0.005(\text{-}25)] = 160$$

$$\text{Amps} = 5.4[1.1\text{-}0.005(\text{-}25)] = 6.6$$

① _ indicates that the missing digit of the catalog number may have multiple values.
② Consult factory.

Control voltage must be in the range of 20 – 28V DC under all conditions. The Eaton's Cutler-Hammer control power supplies listed in **Table 14** are recommended.

Table 14. Standard Power Supply Recommendations

24V DC Power Supplies					
Catalog Number	Continuous		Peak		Input Voltage
	Wattage	Amps	Wattage	Amps	
PSS10E	10	0.4	20	0.8	100 – 240V AC
PSS25E	25	1.0	165	6.5	100 – 240V AC
PSS10F	10	0.4	20	0.8	380 – 480V AC
PSS25F	25	1.0	165	6.5	380 – 480V AC
PSS55A	55	2.3	250	10.4	115V AC
PSS55B	55	2.3	250	10.4	230V AC
PSS55C	55	2.3	250	10.4	360 – 480V AC
PSS160E	—	—	—	—	90 – 260V AC
PSS160C	—	—	—	—	360 – 500V AC
PSS300E	—	—	—	—	90 – 260V AC
PSS300C	—	—	—	—	360 – 500V AC
PSS600C	—	—	—	—	360 – 500V AC

Multiple starters and contactors may be used with one power supply as long as the power supply has the peak and continuous wattage capacity required while maintaining its output voltage within the limits specified.

Use of Multiple Contactors or Starters on One Power Supply

In order to determine the proper power supply for use with multiple contactors or starters, the number of devices closing simultaneously and those already closed must be pre-determined. A calculation may then be made to assure the appropriateness of the power supply selected.

Simultaneous Operation of All Connected Contactors or Starters

To determine the correct power supply with multiple *Contactors* or *Starters* use the following equation:

W_{peak} = Total Inrush Watts of all devices.
$W_{peak} = N_A (W_A) + N_B (W_B) + N_C (W_C) + N_D (W_D) + N_E (W_E) + N_F (W_F)$
$W_{continuous}$ = Total sealed Watts of all devices.
$W_{continuous} = N_A (W_A) + N_B (W_B) + N_C (W_C) + N_D (W_D) + N_E (W_E) + N_F (W_F)$

N = Number of *Contactors* and/or *Starters* for each frame size (A – F).
W = Watts — Inrush or Sealed for each frame size (A – F) see **Table 13**.
The subscripts represent the frame size.

Note:

- The inrush and sealed watts must be calculated independently.
- The power supply selected must have a peak and continuous wattage equal to or greater than those calculated.
- Note that the sealed Watt ratings of the *Contactor* or *Starter* coils are different within a frame size.

Example #1
5 A-Frame *Contactors*
W_{peak} = 5(20)
W_{peak} = 100 Watts
$W_{continuous}$ = 5(1.3)
$W_{continuous}$ = 6.5 Watts

Example #2
1 C-Frame *Starter*
1 D-Frame *Starter*
W_{peak} = 1(90) + 1 (130)
W_{peak} = 90 + 130
W_{peak} = 220 Watts
$W_{continuous}$ = 1(3.6) + 1(5.0)
$W_{continuous}$ = 3.6 + 5
$W_{continuous}$ = 8.6 Watts

Partial Operation of Some Contactors or Starters

W_{peak} = Maximum Inrush Wattage of Devices Energized Simultaneous + the Sealed Watts of Devices already sealed.

$$W_{peak} = [N_A (W_A) + N_B (W_B) + N_C (W_C) + N_D (W_D) + N_E (W_E) + N_F (W_F)]_{inrush} + [N_A (W_A) + N_B (W_B) + N_C (W_C) + N_D (W_D) + N_E (W_E) + N_F (W_F)]_{sealed}$$

$W_{continuous}$ = Total sealed Watts of all devices.

$$W_{continuous} = N_A (W_A) + N_B (W_B) + N_C (W_C) + N_D (W_D) + N_E (W_E) + N_F (W_F)$$

N = Number of *Contactors* and/or *Starters* for each frame size (A – F).
W = Watts — Inrush or Sealed for each frame size (A – F) see **Table 13**.
The subscripts represent the frame size.

Note:

- The inrush and sealed watts must be calculated independently.
- The power supply selected must have a peak and continuous wattage equal to or greater than those calculated.
- Note that the sealed Watt ratings of the *Contactor* and *Starter* coils are different within a given size.

  Example #1
  5 A-Frame *Contactors*
  2 C-Frame *Contactors*
  3 C-Frame *Starters*
  2 D-Frame *Starters*
  1 E-Frame *Starter*
  2 A-Frame *Contactors* and 1 E-Frame *Starter* energized simultaneously, all other devices already closed.

  $W_{peak} = [2(20) + 1(140)]_{inrush} + [3(1.3) + 2(4.2) + 3(3.6) + 2(5.0)]_{sealed}$
  W_{peak} = 40 + 140 + 3.9 + 8.4 + 10.8 + 10
  W_{peak} = 213.1 Watts
  $W_{continuous}$ = 5(1.3) + 2(4.2) + 2(3.6) + 2(5.0) + 1(5.6)
  $W_{continuous}$ = 6.5 + 8.4 + 7.2 + 10 + 5.6
  $W_{continuous}$ = 37.7 Watts

Note that in any calculation the inrush and continuous wattage requirements for any other loads connected to the 24V DC power supply must also be taken into account to assure the selection of the proper power supply.

IT. Starter Setup

Overload FLA Setting

The overload FLA setting customizes the *IT*. Overload Relay for the motor being used. The *IT*. Overload Relay is calibrated for a 1.15 or higher service factor motor, with an ultimate trip at 1.2 times the FLA setting as illustrated in **Figure 27**. This is consistent with the operation of other types of overload devices for 1.15 service factor motors.

Note: The overload Trip Class must be set before adjusting the overload FLA setting if the Trip Class is to be different than the factory default setting of Class 10. See the Overload Class Setting section for setup information.

To access the FLA/CLASS dial for this adjustment, the hinged cover over the dial must be opened. If the cover has been tied closed by a wire tie or other tie down through the slotted lock bar, the tie down will need to be removed first. The closed cover is illustrated in **Figure 26**, and the FLA/CLASS dial with the cover opened in **Figure 27**.

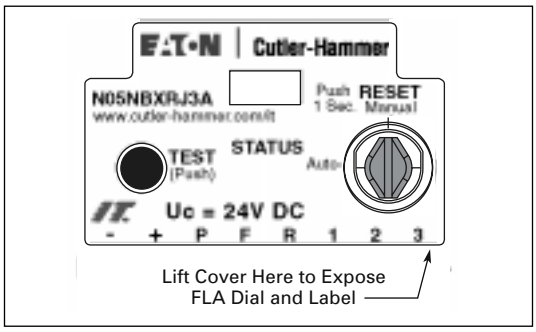

Figure 26: Overload Cover

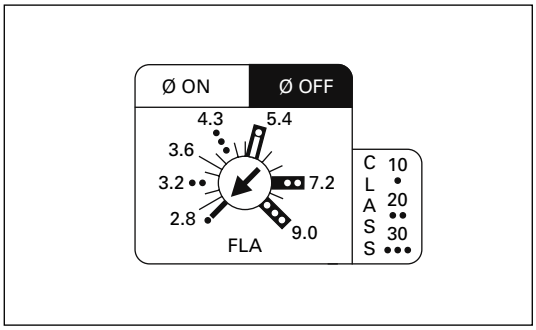

Figure 27: FLA Setting

To set the FLA:

1. Open the *IT*. Overload Relay cover.
2. Turn the FLA/CLASS dial from the default minimum overload level to the motor's full load current rating, see **Figure 27**. The FLA markings will vary by catalog number.
3. **1.0 Service Factor Motor Adjustment** (default is for > 1.15 SF). Rotate the FLA/CLASS dial counterclockwise 15 degrees or one minor division for a setting 7% less than the ampere level shown on the FLA/CLASS dial label as seen in **Figure 27**. This adjustment reduces the trip current to a level corresponding to the requirements for a 1.0 SF motor.
4. After setting the overload FLA setting, close the *IT*. Overload Relay's hinged cover and retie through the slotted lock bar, if required.

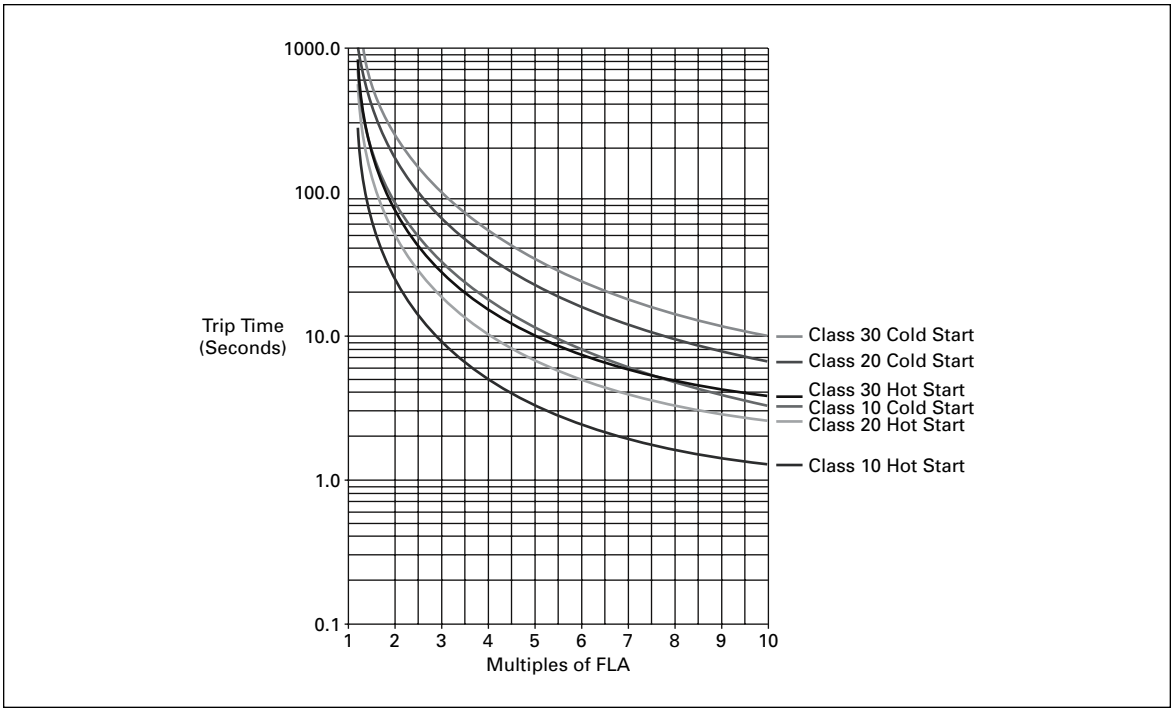

Figure 28: Overload Trip Curves

Overload Class Setting

The *IT*. Overload can be set to provide Class 10, 20 or 30 overload protection, with or without phase loss/unbalance protection. The factory default is Class 10, with phase loss/unbalance protection enabled, and the motor FLA level set to minimum.

When the 24V DC control power is first applied, the status LED on the overload will flash to indicate the current Class setting and phase protection status. See **Figures 29** and **30**. If a different Class or phase protection choice is desired, the selection can be changed with the TEST button and FLA/CLASS dial using the following procedure.

Note: Read this procedure carefully before attempting to adjust the Class setting or phase loss/unbalance protection.

1. Remove the main 3-phase input power. Connect the 24V DC control power. Note that the STATUS LED will flash rapidly, followed by the Trip Class code as shown in **Figures 29** or **30**. The STATUS LED must be off to adjust the CLASS setting. If the STATUS LED is on or blinking, see the Protective Trip section.

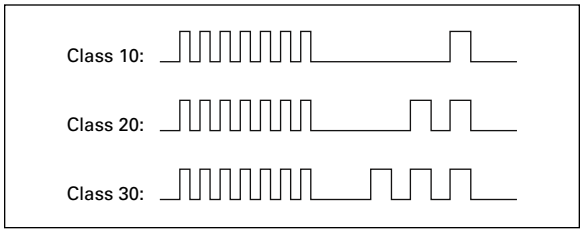

Figure 29: STATUS LED at 24V DC Power-Up — Phase Loss/Current Unbalance Enabled

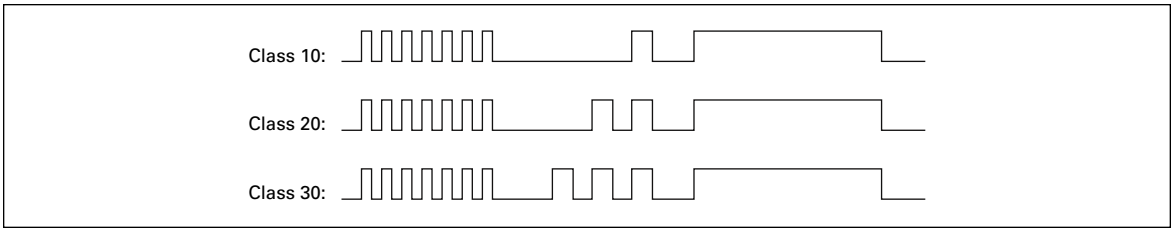

Figure 30: STATUS LED at 24V DC Power-Up — Phase Loss/Current Unbalance Disabled

2. Open the *IT*. Overload Relay cover.
3. Referring to **Figure 31**, turn the FLA/CLASS dial fully clockwise until it stops.
4. Push and hold the TEST button
   a. When the STATUS LED begins to flash, rotate the FLA/CLASS dial fully counterclockwise smoothly, *without pausing* during the rotation, before 4 flashes have occurred. Note that if more than four flashes have occurred, the overload is in the test mode and Class cannot be set. If the test mode is entered, reset the overload (see Trip Reset section) and redo this procedure from step 3.
   b. After three seconds the STATUS LED will begin to flash the Class 10 code as shown in **Figure 29**, rotate the FLA/CLASS dial to one of the six positions as indicated on the label – 10, 20 or 30 with Phase Protection On or 10, 20, or 30 with Phase Protection Off and as illustrated in **Figure 30**.

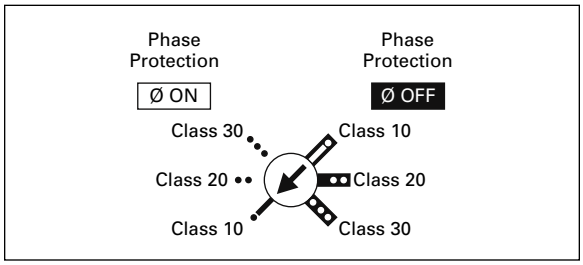

Figure 31: Class Setting

5. The STATUS LED will continuously indicate the Trip Class code (one flash for Class 10, two for Class 20, and three for Class 30) and repeat as long as the TEST button is depressed.
6. Release the TEST button. The STATUS LED will flash rapidly, followed by the Trip Class code as shown in **Figure 29** or **30** for the Class and phase loss protection selected. If not, the Class setting was not changed, likely due to the dial rotation not being smooth or the TEST button being released early. Press the RESET button until the STATUS LED stops flashing and repeat this procedure starting with step 3.
7. The motor FLA setting must now be reset. Proceed to the overload FLA setting section.

Note that the overload trip class must be set prior to adjusting the overload FLA setting if it is to be different than the factory default of Class 10.

The trip curves for each of the overload Classes are shown in the **Figure 28**.

Protective Trip

The *IT*. Overload provides phase loss, phase current unbalance, and overload protection to the connected motor.

⚠ CAUTION

When using the Auto Reset or Remote Reset features, caution must be exercised to prevent an unintended restart from causing personal injury or equipment damage.

Phase Loss and Current Unbalance Protection

General

Phase loss and current unbalance protection will occur as described in the following two sections. These indications are accurate when the actual line currents are at least 75 percent of the minimum FLA rating for the *IT*. Overload Relay. For example, if the current range of an overload is 10 to 32 amps, the minimum value for accurate sensing is 0.75 x 10 = 7.5 amps.

If desired, the phase loss and phase current unbalance protection functions may be disabled during the Class selection process. See the Overload Class Setting section for more information.

If the 24V DC control power is removed during the phase loss or unbalance trip condition, when the 24V DC control power is restored, the STATUS LED and ALARM OUTPUT will activate for 2.5 minutes. After the delay, the LED will begin to flash rapidly. A reset is not possible until this rapid flash occurs.

Phase Loss

If one phase of the input line power is lost, the line current will go to zero, and after 10 seconds, a phase loss trip will occur. The starter is tripped, and the Alarm Output is set on. The STATUS LED will flash at a 0.5 seconds on then 0.5 seconds off rate for 10 seconds, after which it will flash rapidly as shown in **Figure 32**, until the trip is reset. The rapid flash indicates that the trip may be reset. When the trip is reset the ALARM OUTPUT is also reset.

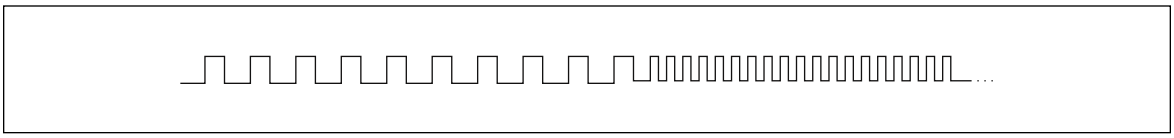

Figure 32: Phase Loss and Current Unbalance Trip Indication

See the Trip Reset section for more reset information.

Phase Current Unbalance

A phase current unbalance trip will occur if one or two of the line currents are 50 percent or less of the remaining line(s) for longer than 10 seconds. The starter is tripped, and the Alarm Output is set on. The STATUS LED will flash at a 0.5 seconds on then 0.5 seconds off rate for 10 seconds, after which it will flash rapidly as shown in **Figure 32**, until the trip is reset. The rapid flash indicates that the trip may be reset. When the trip is reset the ALARM OUTPUT is also reset.

See the Trip Reset section for more reset information.

Overload Protection

The overload protection is based on a calculation using the motor full load amp setting, the overload Class selection, the actual measured current, the motor operating time and its off time. This information is used by the microprocessor to create a thermal estimate, which simulates the motor's thermal condition. The thermal estimate is indicated by the blink rate of the STATUS LED, which is proportional to the motor's calculated thermal condition as shown in **Table 15**, expressed as a percentage of the motor's full load value.

Table 15. Thermal Estimate Status Indication

Thermal Memory	Status LED
Less than 70%	Off
70% – 80%	1 flash
80% – 90%	2 flashes
90% – 95%	3 flashes
95% – 100%	Continuous flash
>100%	Steady On (Fault) Cooling 2.5-14 Minutes

The STATUS LED will indicate the motor's thermal condition, even when the starter is not closed, as long as the 24V DC control power is applied to the + and – terminals. If an overload condition occurs, the *IT*. Overload Relay is tripped and the ALARM OUTPUT is turned on. The microprocessor will continue to calculate the motor's thermal condition. When it is at 75% or less, the STATUS LED will begin flashing rapidly indicating that the trip may be reset. Upon reset, the STATUS LED will blink at a rate which is proportional to the present motor thermal condition.

Notice

The thermal estimate value is saved when the starter is closed or tripped. If 24V DC control power is removed and then reapplied, this thermal estimate level is used for the thermal cool down algorithm, which might cause a trip. This is normal and will automatically clear if no trip occurs. If a trip occurs, the starter can be reset when the thermal estimate is below 75%.

If the Auto Reset feature is enabled and 2-wire control is being utilized, when the motor's thermal condition returns to 75% or less, the overload will automatically reset and the starter will close. Caution must be exercised when using the Auto Reset feature to prevent unintended operation.

Alarm without Trip Function

CAUTION

When using the Alarm without Trip feature, caution must be exercised to prevent personal injury or unacceptable equipment damage due to the elimination of the *IT.* Overload Relay's protective trip features. By setting this function on, the user accepts responsibility for any damage that may occur.

In some applications continued operation is a critical requirement, although damage to the motor or driven equipment may result. If the Alarm without Trip function is enabled and an overload, phase loss or phase current unbalance condition occurs, the ALARM OUTPUT is turned on but the *IT*. Overload Relay will not be tripped. **By setting this function on, the user accepts responsibility for any damage or hazards that may occur as a result of the user's decision to disable the protective trips**.

To enable this feature, the RESET button must be turned to the AUTO position and the remote Reset Terminal 1 of the *IT*. Overload Relay must be connected to the + terminal of the 24V DC power supply as shown in **Figure 33**. The STATUS LED behavior will be the same as outlined above. This feature does not function when the TEST button is used to trip the *IT*. Overload Relay.

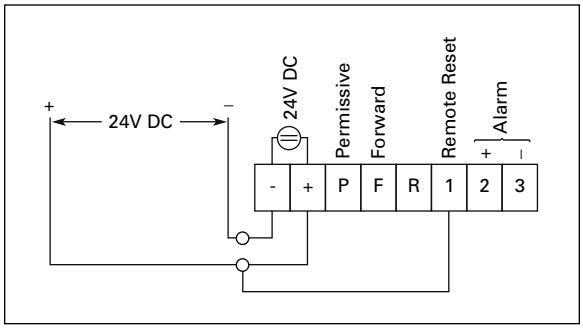

Figure 33: Alarm without Trip Jumper

Trip Reset

CAUTION

When using the Auto Reset or Remote Reset features, caution must be exercised to prevent an unintended restart from causing personal injury or equipment damage.

After a trip condition has occurred, the *IT*. Starter must be reset before operation may resume. There are three choices for resetting the trip: manual, remote and auto. After the fault cause has been cleared and the thermal estimate of the *IT*. Starter is below 75%, the STATUS LED will begin to flash rapidly. At this time the trip may be reset.

Manual Reset

If the RESET button, located on the *IT*. Starter, is in the MANUAL position, to reset, depress the RESET button for one second. This will clear the ALARM OUTPUT and allow the *IT*. Starter to be closed when the P and the F (or R if the starter is a reversing type) terminals are energized.

Remote Reset

If Remote Reset capability is desired, a normally open low energy contact, such as a pushbutton or PLC output, must be wired between the *IT*. Starter terminals + and 1 as shown in the Control Wiring — Starters section of this manual. After the fault cause has been cleared and the thermal estimate of the overload function is below 75%, the STATUS LED will begin to flash rapidly. Closing this Remote Reset contact will clear the ALARM OUTPUT and allow the *IT*. Starter to be operated. The Remote Reset device may be mounted on the enclosure door to provide similar operation to that of a through the door reset mechanism. Note that the Remote Reset contact must be rated for use with a 24V DC low current (3 mA) dry circuit to assure reliable operation. See **Table 12** for recommendations.

Auto Reset

The *IT*. Starter may be reset automatically if desired. Caution must be exercised when using the Auto Reset feature to prevent unintended operation. To set the *IT*. Starter for automatic reset, open the cover and rotate the RESET button to the AUTO position.

After a fault trip and when the thermal estimate of the overload function is below 75%, the trip will automatically reset and the ALARM OUTPUT will clear. If 2-wire control is being used or a Start command is present at the F terminal (or R if the starter is a reversing type) the *IT*. Starter will close.

If the protective trip was due to a phase loss or unbalance condition, which was momentary in nature, and the Auto Reset feature is enabled, the fault will automatically clear after a delay of 10 seconds.

⚠ CAUTION

Do not use the Remote Reset if Auto Reset is used. This will cause the Starter to go into the Alarm without Trip Mode.

Reset Summary

Table 16. Reset Summary

Type of Reset	Reset Method
Manual	RESET button must be in MANUAL position, depress the RESET button for one second.
Remote	Close a low energy contact between terminals + and 1 of the *IT.* Overload.
Auto	RESET button must be in AUTO position. Will reset automatically.

Alarm Output

The ALARM OUTPUT is a solid-state open collector or emitter type output. This output is not a dry contact. It must be used in conjunction with an indicating light, LED, PLC input or relay to provide a status indication. This output is rated for a maximum current of 250 mA DC with a nominal voltage of 24V DC. The power supply for this output is to be supplied by the user. It must not exceed 28V DC under any conditions. If a visual indication is desired, connect a 24V DC LED or incandescent lamp, such as Eaton's Cutler-Hammer E22H22X40 or E30BJ/E30KF10 series, to terminals 2 and 3 of the *IT*. Overload Relay, as shown in **Figure 34**. If a relay output is desired, the relay may be connected as shown in **Figure 35**. The relay coil pickup current must not exceed 250 mA DC. A relay such as an Eaton's Cutler-Hammer D3 series may be used. For larger contact current requirements, the D3 may be used as an interposing relay for a larger relay.

The incandescent lamp, LED, or relay can be connected either in the + or – lead, with the *IT*. Overload Relay Alarm Output being used as a current sink or current source.

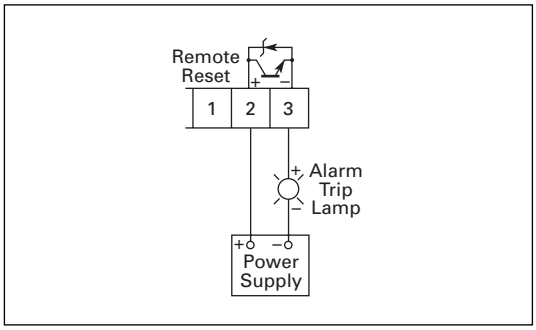

Figure 34: Alarm Light

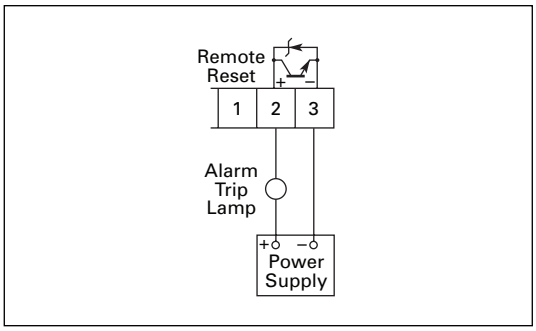

Figure 35: Alarm Relay

Notice

The Alarm Output is not a positive indication of the status of the contactor/starter power contacts. This output only indicates that an alarm condition exists. If a positive indication of the status of the power contacts is required, an auxiliary interlock must be mounted on the forward contactor/starter (and the reverse contactor/starter if present).

Protection Requirements

IT. Contactors and Starters must be installed with upstream protection as required by national and local installation codes and rules. *IT.* Contactors and Starters have a short circuit current withstand capability per IEC 60947-4-1 and EN 60947-4-1 as shown in the **Table 17**.

Table 17. IEC Short Circuit Withstand Capability — Type 1 Coordination

Contactor/Starter Size		'r' Value — Maximum		
Frame	**mm**	**Amps rms (Voltage)**	**Maximum Fuse Rating**	**C-H Breaker Rating**
A	27	1000 (415)	—	WMN3D32 32A, 415V
		1000 (480)	OTS45 ①	—
		1000 (600)	OTS35 ①	FWF3032L 32A, 690V
B	45	3000 (440)	—	Fi3125L 125A, 690V
		3000 (480)	OTS125 ①	FW3125L 125A, 690V
		3000 (600)	OTS80 ①	FW3080L 80A, 690V
C	54	3000 (480)	OTS125 ①	FW3200L 200A, 690V
		3000 (600)	OTS125 ①	FW3125L 125A, 690V
D	76	5000 (480)	OTS300 ①	KW3400 400A, 600V
		5000 (600)	OTS300 ①	KW3250 250A, 690V
E	105	10000 (480)	A4BY800 ② or AJT450 ③	LD3600 600A, 600V
		10000 (600)	AJT300 ③ or OTS350 ①	KW3400 400A, 690V
F	140	—	—	—

① Ferraz Shawmut Class K5, 600V.
② Ferraz Shawmut Class L, 600V.
③ Ferraz Shawmut Class J, 600V.

Troubleshooting and Maintenance

Renewal Parts

Except for the Control Terminal Block, Cover, Bus Bars and Lugs, the Overload Relay contains no user serviceable or replaceable parts. The following *IT*. Contactor and Starter renewal parts are available (see the catalog for details): Coils (54 mm – 140 mm), Contact Kits, DIN Rail Catch, Overload and Coil Controller Covers, Bus Bars and Lugs.

Control Terminal Block

Spare control terminal connectors are available as shown in **Table 18**.

Table 18. *IT*. Control Terminal Connectors

Part No. ①	Used With ②	Description	# Pins	Pitch (mm)	Terminals
EMA78	E111A_ _X3N	27 mm Contactor	4 Pin	5	- + P F
EMA77	E511A_ _S3N	27 mm Reversing Contactor	5 Pin	5	- + P F R
EMA78L	_02N_XCXNN	45 mm, 54 mm Coil Controller	4 Pin	5	- + P F
EMA76L	_02N_XCXNN	76 mm, 105 mm Coil Controller	8 Pin	5	- + P F R 1 2 3
EMA76L	_03N_XCXNN	Reversing Coil Controller	8 Pin	5	- + P F R 1 2 3
EMA76L	_05N_XR_3A	Overload (except 27 mm and 140 mm)	8 Pin	5	- + P F R 1 2 3
EMA76L	_06N_XR_3A	Reversing Overload (except 27 mm and 140 mm)	8 Pin	5	- + P F R 1 2 3
EMA77L	_111F_X3N	140 mm Contactor	(1) 5 Pin	5	- + P F R
TBD			(1) 5 Pin	5	R F P + -
EMA77L	_511F_ _X3N	140 mm Reversing Contactor	(2) 5 Pin	5	- + P F R
TBD			(2) 5 Pin	5	R F P + -
EMA76L	_05NFXR_3A	140 mm Overload	(1) 8 Pin	5	- + P F R 1 2 3
TBD			(1) 5 Pin	5	R F P + -
EMA76L	_05NFXR_3A	140 mm Reversing Overload	(1) 8 Pin	5	- + P F R 1 2 3
TBD			(1) 5 Pin	5	R F P + -
EMA76L	_501F_ _ _3A	140 mm Reversing Overload	(1) 8 Pin	5	- + P F R 1 2 3
TBD			(2) 5 Pin	5	R F P + -
EMA77L			(1) 5 Pin	5	- + P F R

① Suffix "L" indicates locking.
② _ indicates that the missing digit of the catalog number may have multiple values.

Control Terminal Block Removal and Installation

The control terminal block can be removed for wiring and easily re-installed by following the graphical illustration in **Figures 36** and **37** for the locking type terminal blocks.

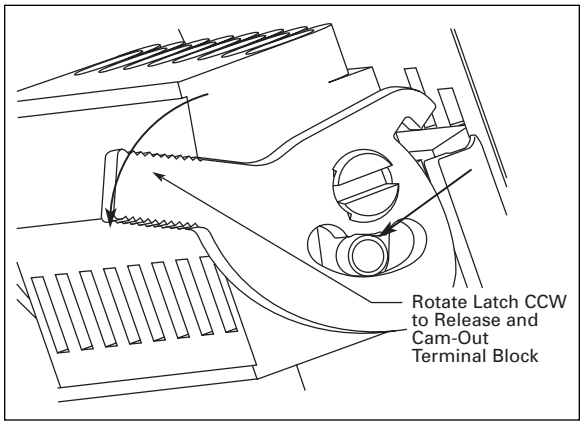

Figure 36: Removing the Terminal Block

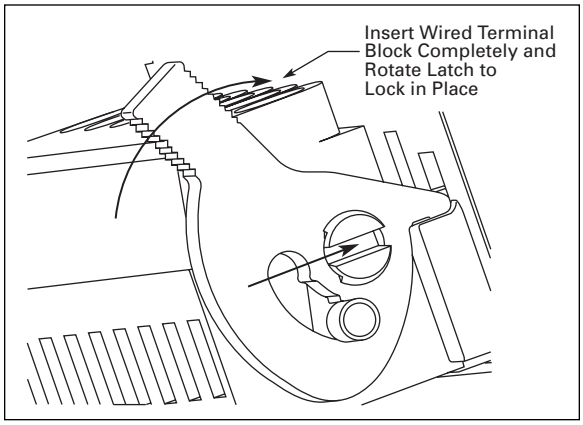

Figure 37: Reinstalling the Terminal Block

Auxiliary Contacts

Auxiliary contacts are available for mounting on *IT*. Contactors and Starters. The various choices available for non-reversing models are shown in **Tables 19** and **20** and their ratings in **Tables 21** and **22**. For reversing models the number of auxiliaries indicated is for each of the contactors/starters in the assembly.

Table 19. Auxiliary Contact Availability — A to E Frames

Contactor/Starter Size		Front Mounted (Maximum Circuits Per Contactor/Starter) ①					
Size	Width (mm)	EMA13 1NO	EMA14 1NC	EMA15 1NO 1NC	EMA16 2NO	EMA17 2NC	EMA70 Logic Level 1NO 1NC
A	27	1	1	—	—	—	1
B	45	3	3	2	2	2	2
C	54	3	3	2 ②	2 ②	2 ②	3
D	76	3	3	3	3	3	3
E	105	3	3	3	3	3	3

① Reversing contactors and starters can use the maximum number of allowed circuits for each direction.
② One EMA70 or a single auxiliary contact may be used in the center position in conjunction with the two EMA15, EMA16 or EMA17 contacts in the outer positions.

Table 20. Auxiliary Contact Availability — F Frame

Contactor/Starter Size		Side Mounted — Per Side (Maximum of 8 Circuits Total Both Sides)					
Frame Size	Width (mm)	EMASB13 1NO	EMASB15 1NO 1NC	EMASA13 1NO	EMASA14 1NC	EMASA15 1NO 1NC	EMA70 ③ Logic Level 1NO 1NC
F	140	1	1	2	2	1	3 ③

③ Front mounted only.

Table 21. Auxiliary Contact — Ratings

Auxiliary Contact (All except EMA70)			
U_e Voltage	I_e Amps	U_e Voltage	I_e Amps
24	5	48	8
48	2.5	120	6
125	1.1	240	4
250	0.55	440	2

Table 22. EMA70 Auxiliary Contact — Rating

EMA70 Auxiliary Contact	
U_e Voltage	I_t Amps
125 – 250	0.1

TEST Button Operation

The TEST button is used to check the operation of the *IT.* Overload Relay trip and ALARM OUTPUT. When the TEST button is pressed, the ALARM OUTPUT will turn on, and the STATUS LED will begin to flash at a rate of 0.8 seconds on, 0.2 seconds off as shown in **Figure 38**. If the TEST button is released in less than 4 seconds, the ALARM OUTPUT and STATUS LED will turn off.

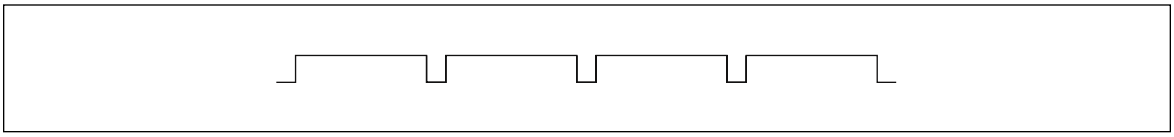

Figure 38: Test Button Pushed Less Than 4 Seconds

If the TEST button is pressed for more than 4 seconds, the *IT.* Starter will trip open, if it was closed, the ALARM OUTPUT is maintained, and the STATUS LED will continue to flash at the 0.8 seconds on, 0.2 seconds off rate. The STATUS LED flash rate will continue until the TEST button is released, and up to 10 seconds after the TEST button was released. The STATUS LED will then begin to flash rapidly indicating that the *IT.* Starter may be reset as shown in **Figure 39**.

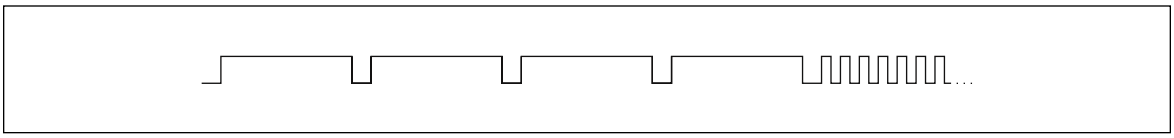

Figure 39: Test Button Pushed Longer Than 4 Seconds

The rapid flashing of the STATUS LED and the ALARM OUTPUT will be maintained until the *IT.* Starter is reset. Depress the RESET button on the *IT.* Starter or close the Remote Reset device to end the test. Note that the *IT.* Starter will trip when the TEST button is pressed for more than 4 seconds, even if the Alarm without Trip function has been enabled. If Auto Reset has been selected, the *IT.* Starter will automatically reset after a time delay of up to 10 seconds.

⚠ CAUTION

Before operating the TEST button, it should be determined that the resulting operation of the ALARM OUTPUT or trip of the *IT.* Starter will not cause any misoperation of any circuitry or systems or create any hazards.

Troubleshooting Chart

Table 23. Troubleshooting

Observation	Possible Cause/Corrective Action
STATUS LED always on, Starter will not close	Overload has tripped on a fault. Wait between 2.5 – 14 minutes for thermal memory to reach 75% level if tripped on overload. Do not remove 24V DC control power to avoid thermal memory return to the prior fault trip level. If overload cannot be reset, contact Eaton's Cutler-Hammer Sales.
STATUS LED always on, Starter closed	*IT.* Overload Relay set to Alarm without Trip, overload has occurred. See Alarm without Trip section.
STATUS LED flashing, Starter closed	The calculated motor thermal condition is above 70% as shown by flash rate. This is normal operation. See Overload section.
	The TEST button is pressed or jammed. The flashing is normal, but the starter should open after the TEST button is pressed for 4 seconds.
	IT. Overload Relay set to Alarm without Trip, but has tripped on phase loss/phase current unbalance. This is normal operation. See Alarm without Trip and Phase Loss and Phase Current Unbalance sections.
STATUS LED flashing, Starter open	Slow flash. TEST button pressed or jammed. See TEST Button Operation. Phase loss/unbalance trip just occurred. LED should begin to flash rapidly after approximately 10 seconds.
	Fast to slower to off. Calculated motor thermal condition above 70%. With cooling time, flash rate will decrease until off. This is normal operation. See Overload section.
	Fast rate. Unit is ready to be reset. Press RESET button to clear. Note after reset, the STATUS LED may flash if calculated motor thermal condition is above 75%.
Cannot set Class	Proper procedure not followed. See Overload Class Setting.
	Unit tripped — STATUS LED on constant. Cannot set Class if tripped. Wait for STATUS LED to begin flashing rapidly, reset and then try again.
STATUS LED does not flash on power up	Check 24V DC control power supply at control terminal block +/- connections.
	Control terminal block not seated or connected properly.
	Check control wiring. See Control Wiring.
Starter drops out immediately when START button is released	Permissive is opening up when START button is released. Miswired or more than two wires used per terminal. Refer to Control Wiring for proper wiring diagram. Use auxiliary terminal blocks to limit wiring to two wires per control terminal.

Table 23. Troubleshooting (Continued)

Observation	Possible Cause/Corrective Action
Contactor/Starter attempts to close when START is commanded but won't stay in	Check 24V DC control power supply, verify inrush capability. See 24V DC Power Supply Selection.
Starter trips shortly after start — STATUS LED on	Verify correct FLA setting. See Overload FLA Setting.
	Verify correct Class setting. See Overload Class Setting.
	Very high current. Normal operation is the unit should trip and STATUS LED is on steady. Check motor, load and wiring. There may be a short circuit or load mechanical problem.
ALARM OUTPUT not functional on Starter	Check wiring of user supplied power supply. If more than 28V DC was applied to terminals the output could be damaged. See Alarm Output section. Contact Eaton's Cutler-Hammer Sales.
	Is unit tripped? Alarm output is active only if unit is tripped or TEST button is pressed. Use TEST button to verify operation. See TEST Button Operation section.
Contactor/Starter will not close	Control terminal block not seated or connected properly.
	Check 24V DC control power supply, verify inrush capability. See 24V DC Power Supply Selection.
	If component blocks were field assembled into the starter and power up seems ok, check for improper assembly of *IT.* Overload Relay to Contact Block — refer to assembly publication. i.e. Reversing *IT.* Overload Relay used to make non-reversing starter, or a Non-reversing *IT.* Overload Relay was used to make a reversing starter. Verify correct catalog number.
	Check control wiring. Make sure permissive(s) closed.
	Check control wiring. Check to make sure the forward control input is wired to the F terminal and not the blank terminal (non-reversing Contact Block only).
	Check control wiring. Remove permissive (press STOP) and try again.
Reversing Contactor/Starter will not close	Unit already running in forward. The units are electrically and mechanically interlocked. The forward unit takes precedence over the reverse if both inputs closed.
	Check control wiring at terminal R for 24V DC when reverse command is applied.
	Check control wiring.
	Remove permissive (press STOP) and try again.
Reversing Contactor/Starter will not close but forward does	Check control wiring at terminal R for 24V DC when reverse command is applied.
	Reversing interlock jammed.
	Remove permissive (press STOP) and try again.

Table 23. Troubleshooting (Continued)

Observation	Possible Cause/Corrective Action
Phase Loss/Phase Current Unbalance trip	Monitor each motor phase current for loss or unbalance. Use ammeter or measure voltages for all three phases.
	If current is missing, with power off, check power contacts on pole for binding.
	Make sure power lug connections are tight. Use proper tool and torque lug to specs. See Power Wiring.
	Non-reversing starter 9 connections: 3 at input on Contact Block, 3 between Overload Relay and Contact Block, 3 at output of Overload Relay.
	Non-reversing starter 9 connections: 3 at input on Contact Block, 3 between Overload Relay and Contact Block, 3 at output of Overload Relay.
	Not recommended for use on the output of an AF drive. Phase loss/phase current unbalance trips may occur.
	Not for use on single-phase loads.
Starter closes as soon as RESET is pressed	2-wire control is used and switch is in RUN. Normal operation. See 2-Wire Control.
Contactor/Starter automatically closes on power up	2-wire control is used and switch is in RUN. Normal operation. See 2-Wire Control.
Starter automatically closes after a trip	2-wire control is used, switch is in RUN, and *IT.* Overload Relay set for Auto Reset. Normal operation. See 2-Wire Control and Trip Reset.
	2-wire control is used, switch is in RUN and remote RESET contact is closed. Normal operation. See 2-Wire Control and Trip Reset.
RESET button does not reset the Overload Relay (Local or remote)	*IT.* Overload Relay not ready to be reset. STATUS LED must be flashing rapidly before reset can occur. Wait and try again. See Trip Reset.
	RESET button not pressed long enough. Must be pressed for at least 1 second.
STATUS LED does not flash rapidly after trip times out, it just goes out	*IT.* Overload Relay set for Auto Reset. Check position of integral RESET button.
	Remote RESET button is pressed or closed.
	Check terminal block wiring to remote RESET input. See Control Wiring.

March 2002

Intelligent Technologies (*IT.*) Publications

Table 24. *IT.* Publications

Publication	Description
Pub # MN03403003E Pub # MN03305001E Pub # 49602 Pub # 49320	*IT.* IEC Overload Relay Setup and Troubleshooting Manual *IT.* NEMA Contactor and Starter User Manual *IT.* IEC Overload Relay (B – F Frame) Quick Setup Guide *IT.* IEC Non-reversing Contactor 27 mm (A-Frame) Installation Guide
Pub # 49640 Pub # 49650 Pub # 49660 Pub # 49670	*IT.* IEC Non-reversing Contactor 45 mm (B-Frame) Installation Guide *IT.* IEC Non-reversing Contactor 54 mm (C-Frame) Installation Guide *IT.* IEC Non-reversing Contactor 76 mm (D-Frame) Installation Guide *IT.* IEC Non-reversing Contactor 105 mm (E-Frame) Installation Guide
Pub # 49680 Pub # 49321 Pub # 49641 Pub # 49651	*IT.* IEC Non-reversing Contactor 140 mm (F-Frame) Installation Guide *IT.* IEC Reversing Contactor 27 mm (A-Frame) Installation Guide *IT.* IEC Reversing Contactor 45 mm (B-Frame) Installation Guide *IT.* IEC Reversing Contactor 54 mm (C-Frame) Installation Guide
Pub # 49661 Pub # 49671 Pub # 49681 Pub # 49642	*IT.* IEC Reversing Contactor 76 mm (D-Frame) Installation Guide *IT.* IEC Reversing Contactor 105 mm (E-Frame) Installation Guide *IT.* IEC Reversing Contactor 140 mm (F-Frame) Installation Guide *IT.* IEC Non-reversing Starter 45 mm (B-Frame) Installation Guide
Pub # 49652 Pub # 49662 Pub # 49672 Pub # 49682	*IT.* IEC Non-reversing Starter 54 mm (C-Frame) Installation Guide *IT.* IEC Non-reversing Starter 76 mm (D-Frame) Installation Guide *IT.* IEC Non-reversing Starter 105 mm (E-Frame) Installation Guide *IT.* IEC Non-reversing Starter 140 mm (F-Frame) Installation Guide
Pub # 49643 Pub # 49653 Pub # 49663 Pub # 49673 Pub # 49683	*IT.* IEC Reversing Starter 45 mm (B-Frame) Installation Guide *IT.* IEC Reversing Starter 54 mm (C-Frame) Installation Guide *IT.* IEC Reversing Starter 76 mm (D-Frame) Installation Guide *IT.* IEC Reversing Starter 105 mm (E-Frame) Installation Guide *IT.* IEC Reversing Starter 140 mm (F-Frame) Installation Guide

For copies of these and other publications contact the Literature Fulfillment Center at 1-800-957-7050 or find on-line at www.cutler-hammer.eaton.com/it

Standards Conformity and Approvals

- UL 508
- CSA C22.2 No.14-95
- IEC 60947-4-1
- EN 60947-4-1
- KEMA (pending)
- CE Marked

Eaton's Cutler-Hammer Aftermarket Services

- Technical/telephone support
- Resident service engineers in major trading centers
- Factory repair services
- Warranty administration
- Equipment modification and upgrading services
- Training seminars

For additional information on this product, please call our Customer Support Center at:

1-800-356-1243

For service or start-up assistance 24 hours/day, 7 days/week, please call:

1-800-498-2678

A response network that gives new meaning to customer service

- Personalized
- Comprehensive
- Professional

Eaton Corporation
Cutler-Hammer business unit
1000 Cherrington Parkway
Moon Township, PA 15108-4312
USA
tel: 1-800-525-2000
www.cutler-hammer.eaton.com

EATON | Cutler-Hammer

© 2002 Eaton Corporation
All Rights Reserved
Publication No. MN03403002E
March 2002
Printed in USA