EATON | Cutler-Hammer

Intelligent Technologies

IEC Overload Relay

Setup and Troubleshooting Manual

B – F Frames

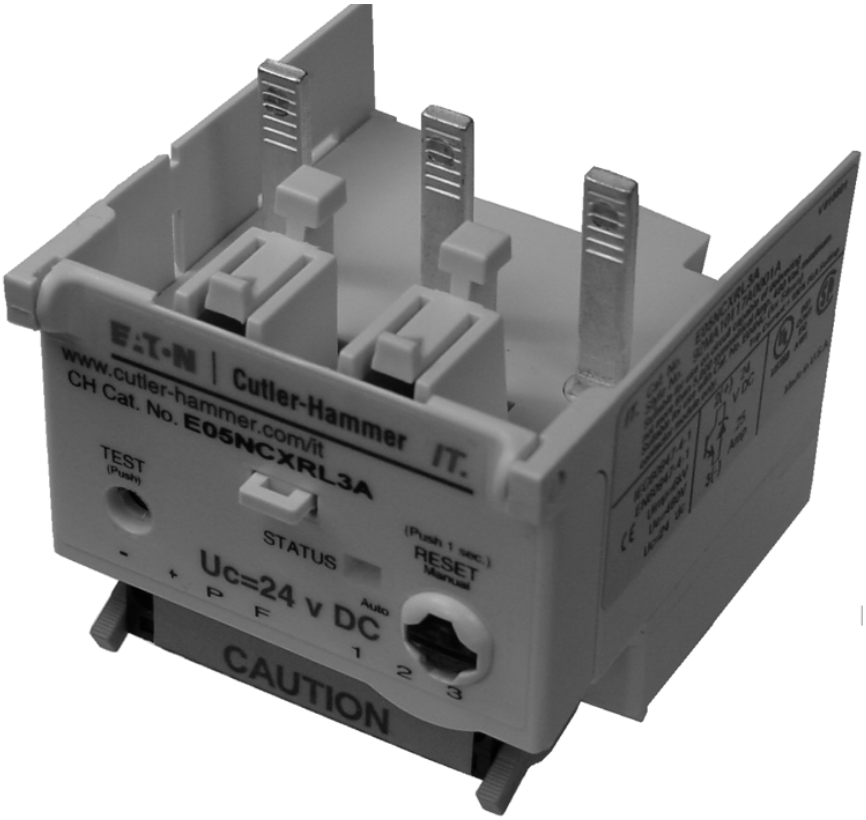

EATON | Cutler-Hammer

Publication No. MN03403003E
March 2002
NEW

March 2002

Important Notice — Please Read

The product discussed in this literature is subject to terms and conditions outlined in appropriate Eaton's Cutler-Hammer selling policies. The sole source governing the rights and remedies of any purchaser of this equipment is the relevant Eaton's Cutler-Hammer selling policy.

NO WARRANTIES, EXPRESS OR IMPLIED, INCLUDING WARRANTIES OF FITNESS FOR A PARTICULAR PURPOSE OR MERCHANTABILITY, OR WARRANTIES ARISING FROM COURSE OF DEALING OR USAGE OF TRADE, ARE MADE REGARDING THE INFORMATION, RECOMMENDATIONS AND DESCRIPTIONS CONTAINED HEREIN. In no event will Eaton's Cutler-Hammer be responsible to the purchaser or user in contract, in tort (including negligence), strict liability or otherwise for any special, indirect, incidental or consequential damage or loss whatsoever, including but not limited to damage or loss of use of equipment, plant or power system, cost of capital, loss of power, additional expenses in the use of existing power facilities, or claims against the purchaser or user by its customers resulting from the use of the information, recommendations and descriptions contained herein.

The information contained in this manual is subject to change without notice.

Cover Photo: *IT.* E05NCXRL3A Overload Relay

March 2002

Table of Contents

PRODUCT OVERVIEW 1
SAFETY 2
CATALOG NUMBERING SYSTEM 3
INSTALLATION SPECIFICATIONS 4
CONTROL WIRING 5
OVERLOAD FLA SETTING 6
OVERLOAD CLASS SETTING 8
PROTECTIVE TRIP 10
Phase Loss and Current Unbalance Protection 10
General 10
Phase Loss 10
Phase Current Unbalance 10
Overload Protection 11
ALARM WITHOUT TRIP FUNCTION 12
TRIP RESET 13
Manual Reset 13
Remote Reset 13
Auto Reset 14
Reset Summary 14
ALARM OUTPUT 15
TROUBLESHOOTING AND MAINTENANCE 16
Renewal Parts 16
Control Terminal Block Removal and Installation 17
TEST Button Operation 18
Troubleshooting Chart 19
INTELLIGENT TECHNOLOGIES (*IT.*) PUBLICATIONS 21
STANDARDS CONFORMITY AND APPROVALS 22

List of Figures

Figure 1: Overload Relay with Cover Open 1
Figure 2: Overload Cover 6
Figure 3: FLA Setting 6
Figure 4: Overload Trip Curves 7
Figure 5: STATUS LED at 24V DC Power-Up — Phase Loss/Current Unbalance Enabled 8
Figure 6: STATUS LED at 24V DC Power-Up — Phase Loss/Current Unbalance Disabled 8
Figure 7: Class Setting 9
Figure 8: Phase Loss and Current Unbalance Trip Indication 10
Figure 9: Alarm without Trip Jumper 12
Figure 10: Alarm Light 15
Figure 11: Alarm Relay 15
Figure 12: Removing the Terminal Block 17
Figure 13: Reinstalling the Terminal Block 17
Figure 14: Test Button Pushed Less Than 4 Seconds 18
Figure 15: Test Button Pushed Longer Than 4 Seconds 18

List of Tables

Table 1. *IT.* Electro-Mechanical Catalog Numbering System 3
Table 2. *IT.* Installation Specifications 4
Table 3. Control Terminal Block Wire Size, Lug Torque and Tool Size 5
Table 4. Thermal Estimate Status Indication 11
Table 5. Low Energy Pilot Device Contact Blocks 13
Table 6. Reset Summary 14
Table 7. IT. Control Terminal Connectors 16
Table 8. Troubleshooting 19
Table 9. *IT.* Publications Numbers 21

March 2002

Product Overview

Cutler-Hammer Intelligent Technologies (*IT.*) Solid-State Overload Relay by Eaton Corporation is the result of a substantive engineering, manufacturing and marketing effort, involving extensive customer input, combined with new advances in solid-state technology. *IT.* products include greatly increased functionality, significantly reduced size, and utilize 24V DC control. The exclusive Pulse Width Modulation (PWM) controller generates the optimum DC level required for coil control, reducing energy requirements while resulting in the most compact system available.

The *IT.* Overload Relay is used in conjunction with an *IT.* Contact Block or Contactor. It is available in several logic designs to enable various starter configurations, and is available as part of a fully assembled starter or in the form of separate components for user assembly including a stand-alone version. The use of this microprocessor based control eliminates the need for seal in auxiliary contacts and provides overload, phase loss and phase current unbalance protection, and an alarm output. This manual provides operational guidelines as well as adjustment procedures for the motor full load amp setting and overload Trip Class. The full load amp setting (and overload Trip Class, if different than the Class 10 factory default) must be set for the particular application before operation is attempted.

The *IT.* Overload Relay includes the following significant features:

- 24V DC control power, a safe reliable global standard
- Phase loss and current unbalance protection, user selectable
- Unique Pulse Width Modulated coil provides high efficiency and low energy consumption
- Selectable Trip Class — 10, 20 or 30
- Ambient compensation
- Microprocessor based
- Protection algorithm which simulates motor temperature
- Thermal Memory at power-up
- Running motor thermal capacity utilization indication
- LED indication for trip, overload status, motor thermal state, availability of reset and Trip Class setting
- Selectable Manual, Remote or Auto Reset
- Alarm Output
- Unique “Alarm without Trip” function for critical must run applications
- Lockable cover protects adjustment and reset functions
- Easy field assembly of control wiring
- No user wiring between the contactor and overload relay
- Communication Interface

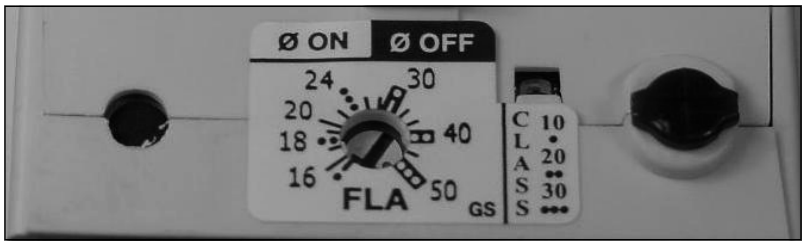

Figure 1: Overload Relay with Cover Open

Safety

The following safety statements relate to the installation, setup and operation of Eaton's Cutler-Hammer *IT.* Solid-State Overload relays.

Notice

Make sure you read and understand the procedures in this manual before you attempt to operate or set up the equipment.

WARNING

This instruction manual should be used for proper setup and operation of the *IT.* Overload Relay. Improper usage and maintenance of this product can result in serious personal injury or property damage. Before attempting installation, setup or operation, read and understand all of this manual.

WARNING

Hazardous voltage can cause electric shock and burns. Always disconnect power before proceeding with any work on this product.

CAUTION

Only apply 24V DC to any of the terminals of the control terminal block. Use of any other voltage may result in personal injury, property damage and damage to the *IT.* Overload Relay.

WARNING

To provide continued protection against fire or shock hazard, the complete *IT.* Overload Relay must be replaced if it becomes defective.

CAUTION

For reversing applications, the Forward input will always override a Reverse input, if both are closed. Caution must be exercised to prevent an unintended direction change.

March 2002

Catalog Numbering System

The catalog numbering system used for Eaton's Cutler-Hammer *IT.* Solid-State Overload Relay and the various other *IT.* electromechanical products is illustrated in **Table 1**. When ordering components for field assembly, care should be exercised to assure that the catalog number for the Overload Relay aligns with the *IT.* Contact Block selected for type, frame size and ampacity. An example of this would be the selection of an E05N_XR_3A *IT.* Overload Relay for an IEC non-reversing application — see additional application examples below.

Table 1. *IT.* Electro-Mechanical Catalog Numbering System

E 05N B XR A 3 A

Standard
E = IEC

Configuration (Open Type)
02N = FVNR Coil Controller
03N = FVR Coil Controller
04N = Contact Block
05N = Solid-State Non-reversing Overload Relay
06N = Solid-State Reversing Overload Relay
071 = Stand-Alone Solid-State Overload Relay
101 = FVNR Starter
111 = FVNR Contactor
501 = FVR Starter
511 = FVR Contactor

Frame Size
A = 27 mm
B = 45 mm
C = 54 mm
D = 76 mm
E = 105 mm
F = 140 mm

Designator (IEC)

(A) **06** = 6 Amps. **09** = 9 Amps. **12** = 12 Amps.	(E) **12** = 125 Amps. **16** = 160 Amps. **20** = 200 Amps.
(B) **18** = 18 Amps. **25** = 25 Amps. **32** = 32 Amps.	(F) **25** = 250 Amps. **31** = 315 Amps. **40** = 400 Amps.
(C) **40** = 40 Amps. **50** = 50 Amps.	**XC** = Coil Controller **XR** = Overload
(D) **65** = 65 Amps. **85** = 85 Amps. **10** = 100 Amps.	

Overload Type
A = Standard
N = Contactor or Not Applicable

Pole Selection
3 = 3-Pole
N = Not Applicable

Overload Amperes Range

(27 mm) **Not Available**	(76 mm) **F** = 5.0 – 16 **H** = 8.4 – 27 **K** = 14 – 45 **N** = 31 – 100
(45 mm) **A** = 0.25 – 0.8 **B** = 0.59 – 1.9 **C** = 1.4 – 4.4 **D** = 2.8 – 9.0 **G** = 6.3 – 20 **J** = 10 – 32	(105 mm) **K** = 14 – 45 **M** = 28 – 90 **P** = 42 – 135 **R** = 63 – 200
(54 mm) **A** = 0.25 – 0.8 **B** = 0.59 – 1.9 **C** = 1.4 – 4.4 **D** = 2.8 – 9.0 **F** = 5.0 – 16 **H** = 8.4 – 27 **L** = 16 – 50	(140 mm) **P** = 42 – 135 **S** = 84 – 270 **T** = 125 – 400 **X** = Contact Block, Coil Controller, Contactor or Not Applicable

Examples:
E101B32J3A — FVNR B-Frame Starter, 32 Amps, with Solid-State Overload, 10 – 32 Amps
E501D10K3A — FVR D-Frame Starter, 100 Amps, with Solid-State Overload, 14 – 45 Amps
E111F25X3N — FVNR F-Frame Contactor, 250 Amps
E05NCXRL3A — Solid-State Non-reversing Overload Relay, 16 – 50 Amps
E04NB18X3N — Contact Block, 45 mm, 18 Amps

Installation Specifications

Table 2. *IT.* Installation Specifications

Description	Specification
Transportation	
Temperature	-50°C to 80°C [-58°F to 176°F]
Humidity	95% non-condensing
Shock	15 g's half-wave sinusoidal 11 msecs
Vibration	5 – 57.5 Hz (100 – 17 msecs) @ 0.3 mm SA 57.5 – 150 Hz (17 – 6.7 msecs_ @ 0.35 mm SA
Storage	
Temperature	-50°C to 80°C [-58°F to 176°F]
Humidity	95% non-condensing
Operating	
Temperature	-40°C to 65°C [-40°F to 149°F]
Humidity	95% non-condensing
Altitude	Above 2000 meters [6600 feet] consult factory
Shock IEC 60068-2-27	15 g's half-wave sinusoidal 11 msecs
Vibration IEC 60068-2-6	5 – 57.5 Hz (100 – 17 msecs) @ 0.3 mm SA 57.5 – 150 Hz (17 – 6.7 msecs) @ 0.35 mm SA
EMC Environment IEC 60947-4-1 & EN 60947-4-1	1
Pollution Degree IEC60947-1	2
Protection Degree IEC60947-1	IP20

March 2002

Control Wiring

All of the control connections are made to the *IT.* Overload Relay terminal block. Various terminal block configurations are supplied for reversing and non-reversing applications as listed in **Table 7**.

The functions of the various terminals are described in the *IT.* IEC Contactor and Starter User Manual, Publication No. 49400. This section describes the requirements for the connections to each of these terminals.

Control wire size ranges, lug torques and tool types are shown in **Table 3**.

Note: The wire used for the – and + 24V DC power supply connections to the *IT.* Coil Controller and Overload Relay terminal blocks should take into account voltage drop due to coil inrush requirements. Refer to the application note on 24V DC Voltage Drop, available on-line at www.cutler-hammer.eaton.com/it.

Table 3. Control Terminal Block Wire Size, Lug Torque and Tool Size

Control Terminal Block Wiring								
Contactor/Starter Size			**Wire Size Range mm^2 [AWG]**			**Torque Nm [lb-in]**	**Terminal Type**	**Tool**
Type	**Frame**	**mm**	**P, F, R, 1, 2, 3** ①	**(-) & (+)**	**Strip Length**			
All	All	All	1 of 0.5 – 2.5 [22 – 12] or 2 of 0.75 – 1.5 [18 – 14]	1 of 1.5-2.5 [14-12] or 2 of 1.5 [14]	7 mm [0.25 in]	0.5 [4.5]	Box Lug Pressure Type	Slotted 3.5 mm [1/8 in.] ①

① When present

Refer to the *IT.* IEC Contactor and Starter User Manual, Publication No. 49400 for detailed wiring instructions. See the *IT.* Publications listing later in this manual for other references.

Overload FLA Setting

The overload FLA setting customizes the *IT.* Overload Relay for the motor being used. The *IT.* Overload Relay is calibrated for a 1.15 or higher service factor motor, with an ultimate trip at 1.2 times the FLA setting as illustrated in **Figure 3**. This is consistent with the operation of other types of overload devices for 1.15 service factor motors.

Note: The overload Trip Class must be set before adjusting the overload FLA setting if the Trip Class is to be different than the factory default setting of Class 10. See the Overload Class Setting section for setup information.

To access the FLA/CLASS dial for this adjustment, the hinged cover over the dial must be opened. If the cover has been tied closed by a wire tie or other tie down through the slotted lock bar, the tie down will need to be removed first. The closed cover is illustrated in **Figure 2**, and the FLA/CLASS dial with the cover opened in **Figure 3**.

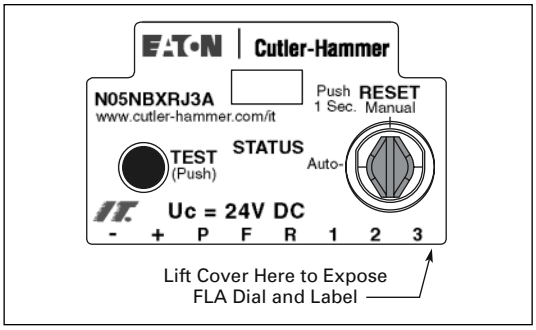

Figure 2: Overload Cover

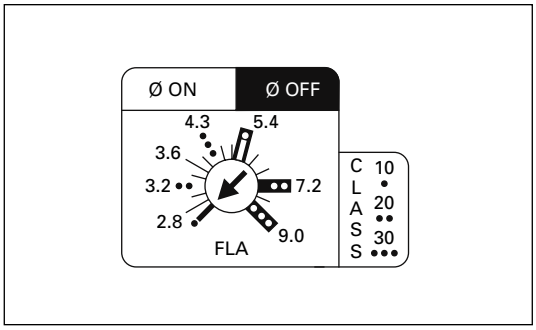

Figure 3: FLA Setting

To set the FLA:

1. Open the *IT.* Overload Relay cover.
2. Turn the FLA/CLASS dial from the default minimum overload level to the motor's full load current rating, see **Figure 3**. The FLA markings will vary by catalog number.
3. **1.0 Service Factor Motor Adjustment** (default is for $\geq$ 1.15 SF). Rotate the FLA/CLASS dial counterclockwise 15 degrees or one minor division for a setting 7% less than the ampere level shown on the FLA/CLASS dial label as seen in **Figure 3**. This adjustment reduces the trip current to a level corresponding to the requirements for a 1.0 SF motor.
4. After setting the overload FLA setting, close the *IT.* Overload Relay's hinged cover and retie through the slotted lock bar if required.

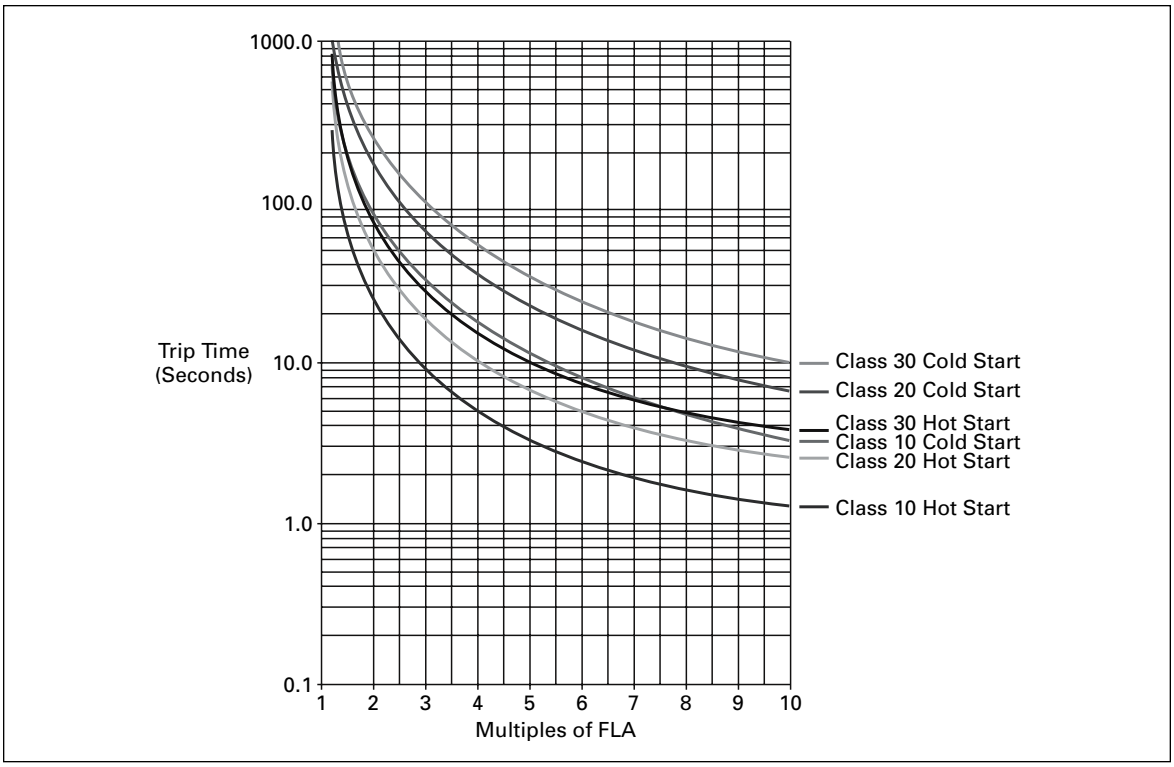

Figure 4: Overload Trip Curves

Overload Class Setting

The *IT.* Overload can be set to provide Class 10, 20 or 30 overload protection, with or without phase loss/unbalance protection. The factory default is Class 10, with phase loss/unbalance protection enabled, and the motor FLA level set to minimum.

When the 24V DC control power is first applied, the STATUS LED on the overload will flash to indicate the current Class setting and phase protection status. See **Figure 5** and **Figure 6**. If a different Class or phase protection choice is desired, the selection can be changed with the TEST button and FLA/CLASS dial using the following procedure.

Note: Read this procedure carefully before attempting to adjust the Class setting.

1. Remove the main three-phase AC input power. Connect the 24V DC control power. Note that the STATUS LED will flash rapidly, followed by the Trip Class code as shown in **Figure 5** or **Figure 6**. The STATUS LED must be off to adjust the CLASS setting. If the STATUS LED is on or blinking, see the Protective Trip section.

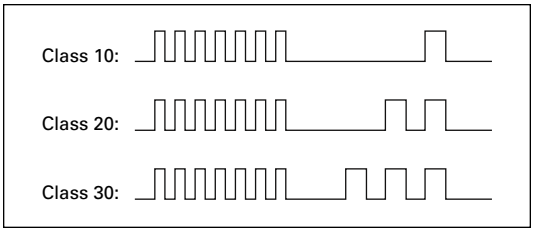

Figure 5: STATUS LED at 24V DC Power-Up — Phase Loss/Current Unbalance Enabled

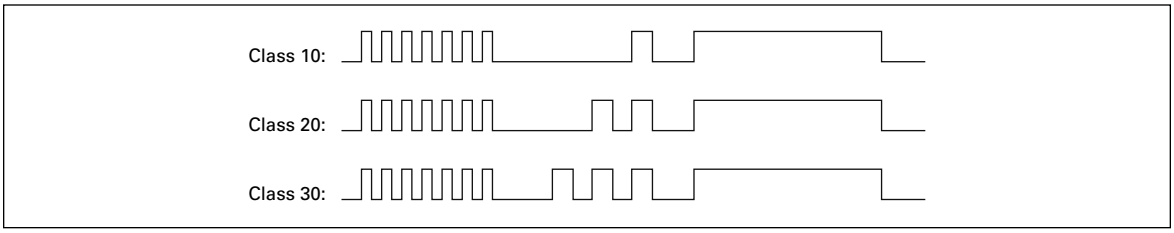

Figure 6: STATUS LED at 24V DC Power-Up — Phase Loss/Current Unbalance Disabled

2. Open the *IT.* Overload Relay cover.
3. Referring to **Figure 7**, turn the FLA/CLASS dial fully clockwise until it stops.
4. Push and hold the TEST button.
   a. When the STATUS LED begins to flash, rotate the FLA/CLASS dial fully counterclockwise smoothly, *without pausing* during the rotation, before 4 flashes have occurred. Note that if more than four flashes have occurred, the overload is in the test mode and Class cannot be set. If the test mode is entered, reset the overload (see Trip Reset section) and redo this procedure from step 3.
   b. After three seconds the STATUS LED will begin to flash the Class 10 code as shown in **Figure 5**, rotate the FLA/CLASS dial to one of the six positions as indicated on the label — 10, 20 or 30 with Phase Protection On or 10, 20, or 30 with Phase Protection Off as illustrated in **Figure 7**.

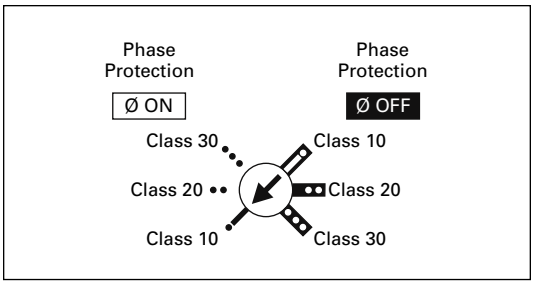

Figure 7: Class Setting

5. The STATUS LED will continuously indicate the Trip Class code (one flash for Class 10, two for Class 20, and three for Class 30) and repeat as long as the TEST button is depressed.
6. Release the TEST button. The STATUS LED will flash rapidly, followed by the Trip Class code as shown in **Figure 5** or **Figure 6** for the Class and phase loss protection selected. If not, the Class setting was not changed, likely due to the dial rotation not being smooth or the TEST button being released early. Press the RESET button until the STATUS LED stops flashing and repeat this procedure starting with step 3.
7. The motor FLA setting must now be reset. Proceed to the overload FLA setting section.

Note: The overload Trip Class must be set prior to adjusting the overload FLA setting if it is to be different than the factory default of Class 10.

The trip curves for each of the overload Classes are shown in the **Figure 4**.

Protective Trip

The *IT.* Overload Relay provides phase loss, phase current unbalance, and overload protection to the connected motor.

⚠ CAUTION

When using the Auto Reset or Remote Reset features, caution must be exercised to prevent an unintended restart from causing personal injury or equipment damage.

Phase Loss and Current Unbalance Protection

General

Phase loss and current unbalance protection will occur as described in the following two sections. These indications are accurate when the actual line currents are at least 75 percent of the minimum FLA rating for the *IT.* Overload Relay. For example, if the current range of an overload is 10 to 32 amps, the minimum value for accurate sensing is 0.75 x 10 = 7.5 amps.

If desired, the phase loss and phase current unbalance protection functions may be disabled during the class selection process. See the Overload Class Setting section for more information.

If the 24V DC control power is removed during the phase loss or unbalance trip condition, when the 24V DC control power is restored, the STATUS LED and ALARM OUTPUT will activate for 2.5 minutes. After the delay, the LED will begin to flash rapidly. A reset is not possible until this rapid flash occurs.

Phase Loss

If one phase of the input line power is lost, the line current will go to zero, and after 10 seconds, a phase loss trip will occur. The starter is tripped, and the Alarm Output is set on. The STATUS LED will flash at a 0.5 seconds on then 0.5 seconds off rate for 10 seconds, after which it will flash rapidly as shown in **Figure 8**, until the trip is reset. The rapid flash indicates that the trip may be reset. When the trip is reset, the ALARM OUTPUT is also reset.

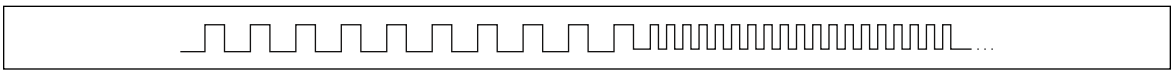

Figure 8: Phase Loss and Current Unbalance Trip Indication

See the Trip Reset section for more reset information.

Phase Current Unbalance

A phase current unbalance trip will occur if one or two of the line currents are 50 percent or less of the remaining line(s) for longer than 10 seconds. The starter is tripped, and the Alarm Output is set on. The STATUS LED will flash at a 0.5 seconds on then 0.5 seconds off rate for 10 seconds, after which it will flash rapidly as shown in **Figure 8**, until the trip is reset. The rapid flash indicates that the trip may be reset. When the trip is reset the ALARM OUTPUT is also reset.

See the Trip Reset section for more reset information.

March 2002

Overload Protection

The overload protection is based on a calculation using the motor full load amp setting, the overload Class selection, the actual measured current, the motor operating time and its off time. This information is used by the microprocessor to create a thermal estimate, which simulates the motor's thermal condition. The thermal estimate is indicated by the blink rate of the STATUS LED, which is proportional to the motor's calculated thermal condition as shown in **Table 4**, expressed as a percentage of the motor's full load value.

Table 4. Thermal Estimate Status Indication

Thermal Memory	Status LED
Less than 70%	Off
70% – 80%	1 flash
80% – 90%	2 flashes
90% – 95%	3 flashes
95% – 100%	Continuous flash
>100%	Steady On (Fault) Cooling 2.5-14 Minutes

The STATUS LED will indicate the motor's thermal condition, even when the starter is not closed, as long as the 24V DC control power is applied to the + and – terminals. If an overload condition occurs, the *IT.* Overload Relay is tripped and the ALARM OUTPUT is turned on. The microprocessor will continue to calculate the motor's thermal condition. When it is at 75% or less, the STATUS LED will begin flashing rapidly indicating that the trip may be reset. Upon reset, the STATUS LED will blink at a rate which is proportional to the present motor thermal condition.

Notice

The thermal estimate value is saved when the starter is closed or tripped. If 24V DC control power is removed and then reapplied, this thermal estimate level is used for the thermal cool down algorithm, which might cause a trip. This is normal and will automatically clear if no trip occurs. If a trip occurs, the starter can be reset when the thermal estimate is below 75%.

If the Auto Reset feature is enabled and the start circuit is closed, when the motor thermal condition returns to 75% or less, the overload will automatically reset and the starter will close. Caution must be exercised when using the Auto Reset feature to prevent unintended operation.

Alarm without Trip Function

⚠ CAUTION

When using the Alarm without Trip feature, caution must be exercised to prevent personal injury or unacceptable equipment damage due to the elimination of the *IT.* Overload Relay's protective trip features. By setting this function on, the user accepts responsibility for any damage that may occur.

In some applications continued operation is a critical requirement, although damage to the motor or driven equipment may result. If the Alarm without Trip function is enabled and an overload, phase loss or phase current unbalance condition occurs, the ALARM OUTPUT is turned on but the *IT.* Overload Relay will not be tripped. **By setting this function on, the user accepts responsibility for any damage or hazards that may occur as a result of the user's decision to disable the protective trips**.

To enable this feature, the RESET button must be turned to the AUTO position and the Remote Reset terminal 1 of the *IT.* Overload Relay must be connected to the + terminal of the 24V DC power supply as shown in **Figure 9**. The STATUS LED behavior will be the same as outlined above. This feature does not function when the TEST button is used to trip the *IT.* Overload Relay.

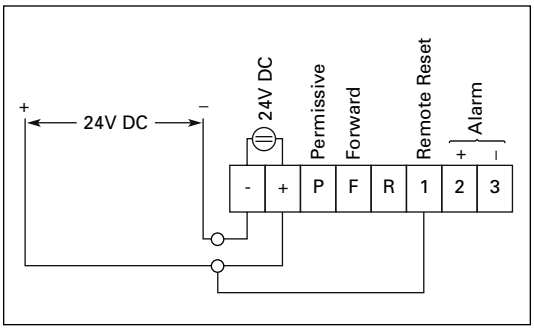

Figure 9: Alarm without Trip Jumper

Trip Reset

⚠ CAUTION

When using the Auto Reset or Remote Reset features, caution must be exercised to prevent an unintended restart from causing personal injury or equipment damage.

After a trip condition has occurred, the *IT.* Overload Relay must be reset before operation may resume. There are three choices for resetting the trip: manual, remote and auto. After the fault cause has been cleared and the thermal estimate of the *IT.* Overload Relay is below 75%, the STATUS LED will begin to flash rapidly. At this time the trip may be reset.

Manual Reset

If the RESET button, located on the *IT.* Overload Relay, is in the MANUAL position, to reset, depress the RESET button for one second. This will clear the ALARM OUTPUT and allow the *IT.* Contact Block to be closed when the P and the F (or R if the starter is a reversing type) terminals are energized.

Remote Reset

If Remote Reset capability is desired, a normally open low energy contact such as a pushbutton or PLC output must be wired between the *IT.* Overload Relay terminals + and 1 as shown in the Control Wiring — Starters Section of the *IT. IEC Contactor and Starter User Manual*. After the fault cause has been cleared and the thermal estimate of the *IT.* Overload Relay is below 75%, the STATUS LED will begin to flash rapidly. Closing this Remote Reset contact will clear the ALARM OUTPUT and allow the *IT.* Starter to be operated. The remote reset device may be mounted on the enclosure door to provide similar operation to that of a through-the-door reset mechanism. Note that the Remote Reset contact must be rated for use with a 24V DC low current (3 mA) dry circuit to assure reliable operation. See **Table 5** for recommendations.

Table 5. Low Energy Pilot Device Contact Blocks

Pilot Device Recommended Eaton's Cutler-Hammer Contact Blocks	
Cat #	**Circuit**
E22B1E E22B2E E30KLAE1	1NC 1NO 1NO
E30KLAE2 E30KLAE3 E30KLAE4 E30KLAE5	1NC 1NO, 1NC 2NO 2NC
10250T51E 10250T53E 10250T1E 10250T3E 10250T2E	1NC 1NO 1NO, 1NC 2NC 2NO

Note: Contact blocks with reliability "nibs" are also suitable.

Auto Reset

The *IT.* Overload Relay may be reset automatically if desired. Caution must be exercised when using the Auto Reset feature to prevent unintended operation. To set the *IT.* Overload Relay for automatic reset, open the cover and rotate the RESET button to the AUTO position.

After the thermal estimate of the *IT.* Overload Relay is below 75%, the trip will automatically reset and the ALARM OUTPUT will clear. If a Start command is present at the F terminal (or R if the starter is a reversing type) the *IT.* Starter will close.

If the protective trip was due to a phase loss or unbalance condition, which was momentary in nature, and the Auto Reset feature is enabled, the fault will automatically clear after a delay of 10 seconds.

⚠ CAUTION

Do not use the Remote Reset if Auto Reset is used. This will cause the Overload Relay to go into the Alarm without Trip Mode.

Reset Summary

Table 6. Reset Summary

Type of Reset	Reset Method
Manual	RESET button must be in MANUAL position, depress the RESET button for one second.
Remote	Close a low energy contact between terminals + and 1 of the *IT.* Overload.
Auto	RESET button must be in AUTO position. Will reset automatically.

March 2002

Alarm Output

The ALARM OUTPUT is a solid-state open collector or emitter type output. This output is not a dry contact. It must be used in conjunction with an indicating light, LED, PLC input or relay to provide a status indication. This output is rated for a maximum current of 250 mA DC with a nominal voltage of 24V DC. The power supply for this output is to be supplied by the user. It must not exceed 28V DC under any conditions. If a visual indication is desired, connect a 24V DC LED or incandescent lamp, such as Eaton's Cutler-Hammer E22H22X40 or E30BJ/E30KF10 series, to terminals 2 and 3 of the *IT.* Overload Relay, as shown in **Figure 10**. If a relay output is desired, the relay may be connected as shown in **Figure 11**. The relay coil pickup current must not exceed 250 mA DC. A relay such as an Eaton's Cutler-Hammer D3 series may be used. For larger contact current requirements, the D3 may be used as an interposing relay for a larger relay.

The incandescent lamp, LED or relay can be connected either in the + or – lead, with the *IT.* Overload Relay Alarm Output being used as a current sink or current source.

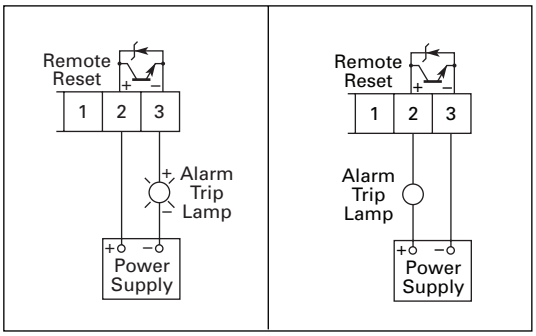

Figure 10: Alarm Light **Figure 11: Alarm Relay**

Notice

The Alarm Output is not a positive indication of the status of the contactor/starter power contacts. This output only indicates that an alarm condition exists. If a positive indication of the status of the power contacts is required, an auxiliary interlock must be mounted on the forward contactor/starter (and the reverse contactor/starter if present).

Troubleshooting and Maintenance

Renewal Parts

Except for the Control Terminal Block, Cover, Bus Bars and Lugs, the Overload Relay contains no user serviceable or replaceable parts.

Spare control terminal connectors are available as shown in **Table 7**.

Table 7. *IT.* Control Terminal Connectors

Part No. ①	Used With ②	Description	# Pins	Pitch (mm)	Terminals
EMA78L	_02N_XCXNN	45 mm, 54 mm Coil Controller	4 Pin	5	- + P F
EMA76L	_02N_XCXNN	76 mm, 105 mm Coil Controller	8 Pin	5	- + P F R 1 2 3
EMA76L	_03N_XCXNN	Reversing Coil Controller	8 Pin	5	- + P F R 1 2 3
EMA76L	_05N_XR_3A	Overload (except 140 mm)	8 Pin	5	- + P F R 1 2 3
EMA76L	_06N_XR_3A	Reversing Overload (except 27 mm and 140 mm)	8 Pin	5	- + P F R 1 2 3
EMA77L TBD	_111F_X3N	140 mm Contactor	One – 5 Pin One – 5 Pin	5 5	- + P F R R F P + -
EMA77L TBD	_511F_ _X3N	140 mm Reversing Contactor	Two – 5 Pin Two – 5 Pin	5 5	- + P F R R F P + -
EMA76L TBD	_05NFXR_3A	140 mm Overload	One – 8 Pin One – 5 Pin	5 5	- + P F R 1 2 3 R F P + -
EMA76L TBD	_05NFXR_3A	140 mm Reversing Overload	One – 8 Pin One – 5 Pin	5 5	- + P F R 1 2 3 R F P + -
EMA76L TBD EMA77L	_501F_ _ _3A	140 mm Reversing Overload	One – 8 Pin Two – 5 Pin One – 5 Pin	5 5 5	- + P F R 1 2 3 R F P + - - + P F R

① Suffix "L" indicates locking.
② _ indicates that the missing digit of the catalog number may have multiple values.

Control Terminal Block Removal and Installation

The control terminal block can be removed for wiring and easily re-installed by following the graphical illustration in **Figures 12** and **13** for the locking type terminal blocks.

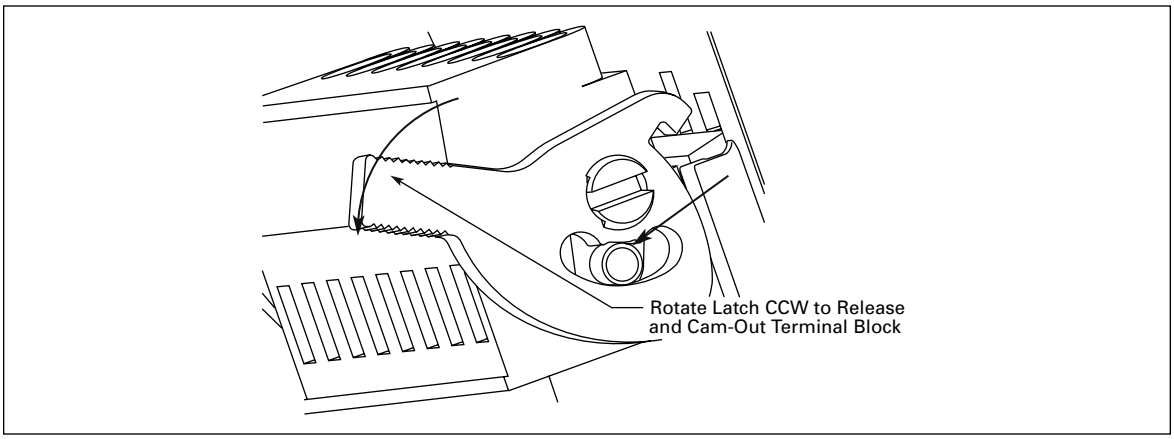

Figure 12: Removing the Terminal Block

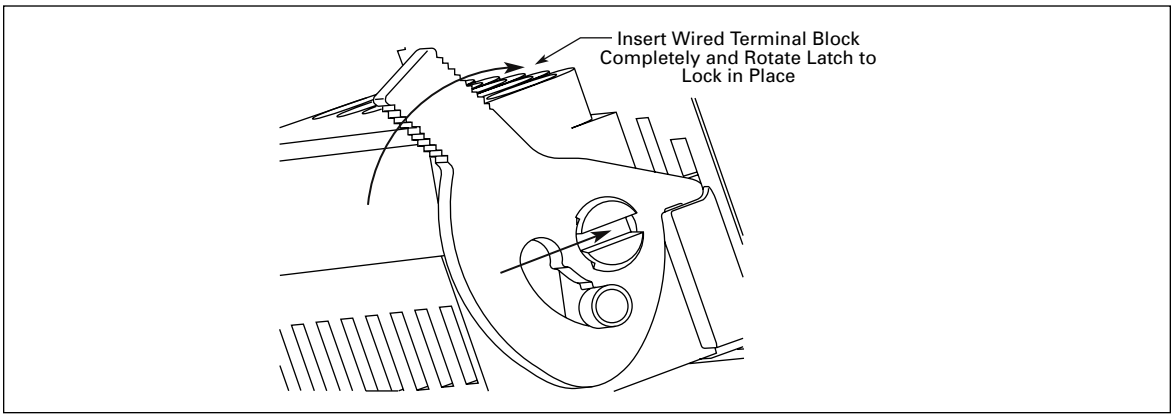

Figure 13: Reinstalling the Terminal Block

TEST Button Operation

The TEST button is used to check the operation of the *IT.* Overload Relay trip and ALARM OUTPUT. When the TEST button is pressed, the ALARM OUTPUT will turn on, and the STATUS LED will begin to flash at a rate of 0.8 seconds on, 0.2 seconds off as shown in **Figure 14**. If the TEST button is released in less than 4 seconds, the ALARM OUTPUT and STATUS LED will turn off.

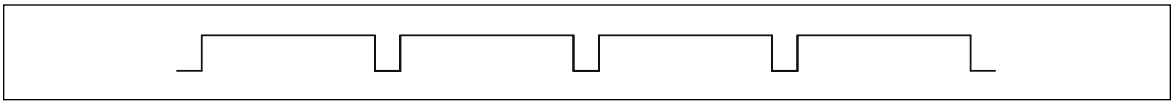

Figure 14: Test Button Pushed Less Than 4 Seconds

If the TEST button is pressed for more than 4 seconds, the *IT.* Overload Relay will trip, the ALARM OUTPUT is maintained, and the STATUS LED will continue to flash at the 0.8 seconds on, 0.2 seconds off rate. The STATUS LED flash rate will continue until the TEST button is released, and up to 10 seconds after the TEST button was released. The STATUS LED will then begin to flash rapidly indicating that the *IT.* Overload Relay may be reset as shown in **Figure 15**.

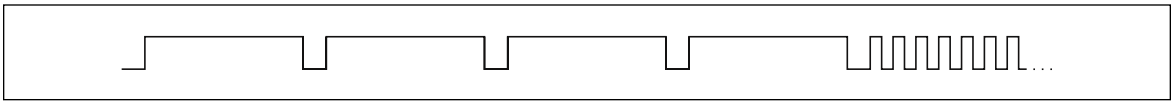

Figure 15: Test Button Pushed Longer Than 4 Seconds

The rapid flashing of the STATUS LED and the ALARM OUTPUT will be maintained until the *IT.* Overload is reset. Depress the RESET button on the *IT.* Overload Relay or close the Remote Reset device to end the test. Note that the *IT.* Overload Relay will trip when the TEST button is pressed for more than 4 seconds even if the Alarm without Trip function has been enabled. If Auto Reset has been selected, the IT. Overload Relay will automatically reset after a time delay of up to 10 seconds.

⚠ CAUTION

Before operating the TEST button, it should be determined that the resulting operation of the ALARM OUTPUT or opening of the *IT.* Overload will not cause any misoperation of any circuitry or systems or create hazards external to the *IT.* Overload Relay.

March 2002

Troubleshooting Chart

Table 8. Troubleshooting

Observation	Possible Cause/Corrective Action
STATUS LED always on, Contact Block will not close	Overload has tripped on a fault. Wait between 2.5 – 14 minutes for thermal memory to reach 75% level if tripped on overload. Do not remove 24V DC control power to avoid thermal memory reset to the prior fault trip level. If overload cannot be reset, contact Eaton's Cutler-Hammer Sales.
STATUS LED always on, Contact Block closed	*IT.* Overload Relay set to Alarm without Trip, overload has occurred. See Alarm without Trip section.
STATUS LED flashing, Contact Block closed	The calculated motor thermal condition is above 70% as shown by flash rate. This is normal operation. See Overload section.
	The TEST button is pressed or jammed. The flashing is normal, but the contactor should open after the TEST button is pressed for 4 seconds.
	IT. Overload Relay set to Alarm without Trip, but has tripped on phase loss/phase current unbalance. This is normal operation. See Alarm without Trip and Phase Loss and Phase Current Unbalance sections.
STATUS LED flashing, Contact Block open	Slow flash. TEST button pressed or jammed. See TEST Button Operation. Phase loss/unbalance trip just occurred. LED should begin to flash rapidly after approximately 10 seconds.
	Fast to slower to off. Calculated motor thermal condition above 70%. With cooling time, the flash rate will decrease until off. This is normal operation. See Overload section.
	Fast rate. Unit is ready to be reset. Press RESET button to clear. Note after reset, the STATUS LED may flash if calculated motor thermal condition is above 75%.
Cannot set Class	Proper procedure not followed. See Overload Class Setting.
	Unit tripped — STATUS LED on constant. Cannot set Class if tripped. Wait for STATUS LED to begin flashing rapidly, reset and then try again.

Table 8. Troubleshooting (Continued)

Observation	Possible Cause/Corrective Action
STATUS LED does not flash on power-up	Check 24V DC control power supply at control terminal block +/- connections.
	Control terminal block not seated or connected properly.
	Check control wiring. See Control Wiring.
RESET button does not reset the Overload Relay (Local or remote)	*IT.* Overload Relay not ready to be reset. STATUS LED must be flashing rapidly before reset can occur. Wait and try again. See Trip Reset.
	RESET button not pressed long enough. Must be pressed for at least 1 second.
ALARM OUTPUT not functional	Check wiring of user supplied power supply. If more than 28V DC was applied to terminals the output could be damaged. See Alarm Output section, contact Eaton's Cutler-Hammer Sales.
	Is unit tripped? Alarm output is active only if unit is tripped or TEST button is pressed. Use TEST button to verify operation. See TEST Button Operation section.
STATUS LED does not flash rapidly after trip times out, it just goes out	*IT.* Overload Relay set for Auto Reset. check position of integral RESET button.
	Remote RESET button is pressed or closed.
	Check terminal block wiring to remote RESET input. See the Control Wiring section of the *IT. IEC Contactor and Starter User Manual*

March 2002

Intelligent Technologies (*IT.*) Publications

Table 9. *IT.* Publications Numbers

Publication	Description
Pub 49602	*IT.* IEC Overload Relay Quick Setup Guide
Pub 49400	*IT.* IEC Contactor and Starter User Manual
Pub 49320	*IT.* IEC Non-reversing Contactor 27 mm (A-Frame) Installation Guide
Pub 49640	*IT.* IEC Non-reversing Contactor 45 mm (B-Frame) Installation Guide
Pub 49650	*IT.* IEC Non-reversing Contactor 54 mm (C-Frame) Installation Guide
Pub 49660	*IT.* IEC Non-reversing Contactor 76 mm (D-Frame) Installation Guide
Pub 49670	*IT.* IEC Non-reversing Contactor 105 mm (E-Frame) Installation Guide
Pub 49680	*IT.* IEC Non-reversing Contactor 140 mm (F-Frame) Installation Guide
Pub 49321	*IT.* IEC Reversing Contactor 27 mm (A-Frame) Installation Guide
Pub 49641	*IT.* IEC Reversing Contactor 45 mm (B-Frame) Installation Guide
Pub 49651	*IT.* IEC Reversing Contactor 54 mm (C-Frame) Installation Guide
Pub 49661	*IT.* IEC Reversing Contactor 76 mm (D-Frame) Installation Guide
Pub 49671	*IT.* IEC Reversing Contactor 105 mm (E-Frame) Installation Guide
Pub 49681	*IT.* IEC Reversing Contactor 140 mm (F-Frame) Installation Guide
Pub 49642	*IT.* IEC Non-reversing Starter 45 mm (B-Frame) Installation Guide
Pub 49652	*IT.* IEC Non-reversing Starter 54 mm (C-Frame) Installation Guide
Pub 49662	*IT.* IEC Non-reversing Starter 76 mm (D-Frame) Installation Guide
Pub 49672	*IT.* IEC Non-reversing Starter 105 mm (E-Frame) Installation Guide
Pub 49682	*IT.* IEC Non-reversing Starter 140 mm (F-Frame) Installation Guide
Pub 49643	*IT.* IEC Reversing Starter 45 mm (B-Frame) Installation Guide
Pub 49653	*IT.* IEC Reversing Starter 54 mm (C-Frame) Installation Guide
Pub 49663	*IT.* IEC Reversing Starter 76 mm (D-Frame) Installation Guide
Pub 49673	*IT.* IEC Reversing Starter 105 mm (E-Frame) Installation Guide
Pub 49683	*IT.* IEC Reversing Starter 140 mm (F-Frame) Installation Guide

For copies of these and other publications, contact the Literature Fulfillment Center at 1-800-957-7050, or find on-line at www.cutler-hammer.eaton.com/it.

Standards Conformity and Approvals

- UL 508
- CSA C22.2 No.14-95
- IEC 60947-4-1
- EN 60947-4-1
- KEMA (pending)
- CE Marked

Eaton's Cutler-Hammer Aftermarket Services

- Technical/telephone support
- Resident service engineers in major trading centers
- Factory repair services
- Warranty administration
- Equipment modification and upgrading services
- Training seminars

For additional information on this product, please call our Customer Support Center at:

1-800-356-1243

For service or start-up assistance 24 hours/day, 7 days/week, please call:

1-800-498-2678

A response network that gives new meaning to customer service

- Personalized
- Comprehensive
- Professional

Eaton Corporation
Cutler-Hammer business unit
1000 Cherrington Parkway
Moon Township, PA 15108-4312
USA
tel: 1-800-525-2000
www.cutler-hammer.eaton.com

EATON | Cutler-Hammer

© 2002 Eaton Corporation
All Rights Reserved
Publication No. MN03403003E
March 2002
Printed in USA