Cutler-Hammer

Intelligent Technologies
DeviceNet™ Adapter (D77D-DNA)

Installation and User Manual

January 2004
Supersedes October 2002

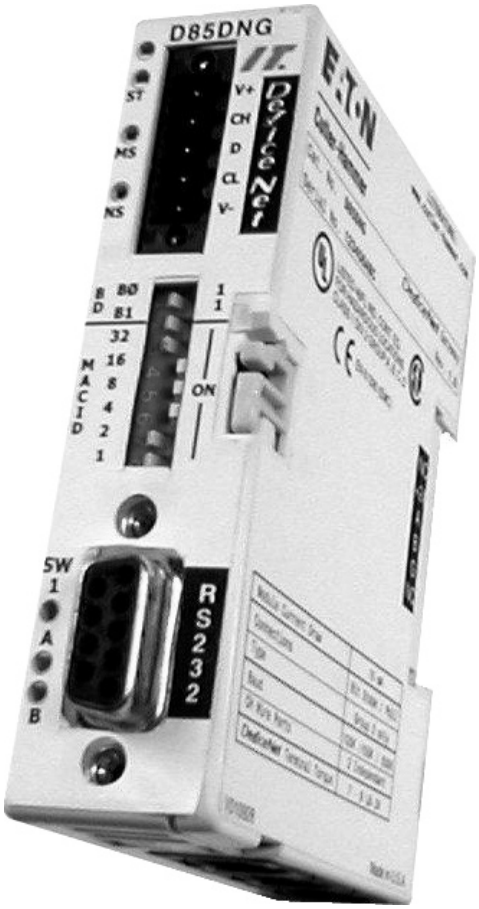

January 2004

Important Notice – Please Read

The product discussed in this literature is subject to terms and conditions outlined in Eaton Electrical Inc. selling policies. The sole source governing the rights and remedies of any purchaser of this equipment is the relevant Eaton Electrical Inc. selling policy.

NO WARRANTIES, EXPRESS OR IMPLIED, INCLUDING WARRANTIES OF FITNESS FOR A PARTICULAR PURPOSE OR MERCHANTABILITY, OR WARRANTIES ARISING FROM COURSE OF DEALING OR USAGE OF TRADE, ARE MADE REGARDING THE INFORMATION, RECOMMENDATIONS AND DESCRIPTIONS CONTAINED HEREIN. In no event will Eaton Electrical Inc. be responsible to the purchaser or user in contract, in tort (including negligence), strict liability or otherwise for any special, indirect, incidental or consequential damage or loss whatsoever, including but not limited to damage or loss of use of equipment, plant or power system, cost of capital, loss of power, additional expenses in the use of existing power facilities, or claims against the purchaser or user by its customers resulting from the use of the information, recommendations and descriptions contained herein.

The information contained in this manual is subject to change without notice.

Cover Photo: Cutler-Hammer® ***IT***. D77D-DNA DeviceNet Adapter

Table of Contents

PRODUCT OVERVIEW
- Description 1
- Features and Benefits 1
- Safety 2
- Environmental Ratings 2
- Approvals/Certifications 3
- DeviceNet Codes 3
- Module Current Draw 3
- Communication Specifications 4
- Catalog Numbering System 4

PHYSICAL FEATURES
- Physical Description 5
- Dimensions 6
- Power Supply Requirements 7

OPERATION
- Auto Configuration 8
  - *Overview* 8
  - *Preparation* 9
  - *Soft Configuration* 9
  - *Hard Configuration* 10
- Adding or Removing Devices from the Scan List 12
- Replacing a Pre Hot Swap Device on QCPort 13
  - *If the Device Is Preconfigured* 13
  - *How to Preconfigure a Device* 14
  - *Replacing a Hot Swap Device on QCPort* 14
- Typical Application 16
- Scanning 16
- Control Words 17
  - *Output Control Word* 17
  - *Input Control Word* 18
- I/O Mapping 19
  - *Sample DeviceNet I/O Mapping* 19
- Status LEDs 22

ADVANCED CONFIGURATION 23
- Run a Report 25

INSTALLATION
Set the DeviceNet MAC ID and Baud Rate 26
Connect to DeviceNet 27
Installation on a DIN Rail 27
Install on a DIN Rail (No Backplane) 27
Install on a DIN Rail with Backplane 28
Replace Existing Module 30
Connect Devices 31
Connections/Interconnects 31
TROUBLESHOOTING AND MAINTENANCE
Renewal Parts 33
Troubleshooting 34
APPENDIX A: SUPPORTED DEVICENET OBJECTS
Reset Service 35
Identity Object: 0x01 — Instance 0 36
Status Indicators 36
Identity Object: 0x01 — Instance 1 38
Identity Object: 0x01 — Instance 2 to 127 41
DeviceNet Object: 0x03 43
Assembly Object: 0x04 43
Connection Object: 0x05 43
QCPort Backplane Interface Control Object: 0x8F 45
QCPort Data Association Object: 0x90 49
Assembly/Register Data Association Object: 0x91 50
***IT*. PUBLICATIONS AND SUPPORT**
Publications 51

List of Figures

Figure 1: D77D-DNA Front Features 5
Figure 2: D77D-DNA Back Features 5
Figure 3: D77D-DNA QCPort Connections 5
Figure 4: D77D-DNA Dimensions, mm [in] 6
Figure 5: Device Ventilation 6
Figure 6: D77D-DNA Power Isolation 7
Figure 7: Soft Configuration 10
Figure 8: Hard Configuration 11
Figure 9: Typical D77D-DNA Application 16
Figure 10: I/O Mapping Example 20
Figure 11: Studio Explorer (Docked View) 23
Figure 12: Properties Window 23
Figure 13: General Tab 24
Figure 14: I/O Information 24
Figure 15: I/O Property Page 25
Figure 16: DIP Switch Designation 26
Figure 17: DeviceNet Connection 27
Figure 18: Unlock DIN Rail Locking Tab 27
Figure 19: Lock DIN Rail Locking Tab 28
Figure 20: Unlock DIN Rail Locking Tab 28
Figure 21: Adapter Installation on a Backplane 29
Figure 22: Lock DIN Rail Locking Tab 29
Figure 23: Unlock DIN Rail Locking Tab 30
Figure 24: Lock DIN Rail Locking Tab 30
Figure 25: QCPort Channels 31
Figure 26: QCPort Backplane 32
Figure 27: Device/QCPort Backplane 32
Figure 28: RJ Connector 32
Figure 29: Scan List Example 37

List of Tables

Table 1: Environmental Ratings 2
Table 2: Approvals/Certifications 3
Table 3: DeviceNet Codes 3
Table 4: Module Current Draw 3
Table 5: Communication Specifications 4
Table 6: Proper State of LEDs 9
Table 7: Output Control Word 17
Table 8: Example Control Word with Only 1 Channel (CHA) Being Scanned 17
Table 9: Sample Output Assembly 18
Table 10: Input Status Word 18
Table 11: Example Status Word of a Healthy System with Only 1 Channel (CHA) Being Scanned 18
Table 12: Sample Input Assembly 18
Table 13: Example I/O Mapping 19
Table 14: Word Boundary Example 1 19
Table 15: Input Word Boundary Example 1 19
Table 16: Word Boundary Example 2 20
Table 17: Input Word Boundary Example 2 20
Table 18: QCPort Device Data Size 21
Table 19: DeviceNet Poll Input Assembly 21
Table 20: DeviceNet Poll Output Assembly 21
Table 21: D77D-DNA Status LED 22
Table 22: DeviceNet Module Status LED (MS) 22
Table 23: DeviceNet Network Status LED (NS) 22
Table 24: CHA and CHB Status LED 22
Table 25: Baud Rate Table 26
Table 26: Accessories 33
Table 27: Troubleshooting Chart 34
Table 28: Objects 35
Table 29: DeviceNet Object Common Services 35
Table 30: Reset Actions 35
Table 31: Instance 0 36
Table 32: Instance of Identity 36
Table 33: Example Scan List 37
Table 34: Instance 1 38
Table 35: Status — Instance 1 to 127 39
Table 36: Error Code: Instance 1 40
Table 37: Instance 2 to 127 41
Table 38: Product Code — Instance 2 to 127 42
Table 39: Error Codes Instance 2 to 127 42
Table 40: Instance 1 43
Table 41: Instance 101 [0x65] (Produced Poll Connection) 43

Table 42: Instance 103 [0x67] (Produced Bit Strobe Connection) 43
Table 43: Instance 1 (Explicit Connection) 43
Table 44: Instance 2 (Poll Message) 44
Table 45: Instance 3 (Bit Strobe Message) 44
Table 46: Instance 1 (Channel A) 45
Table 47: Instance 2 (Channel B) 47
Table 48: Instance 1 D77D-DNA Poll Response 49
Table 49: Instance 2 to 64 Channel A 49
Table 50: Instance 65 to 127 Channel B 49
Table 51: Example Status Indicators 50
Table 52: Instance 1 50
Table 53: ***IT***. Publications 51

January 2004

Product Overview

Description

Cutler-Hammer® Intelligent Technologies (***IT.***) D77D-DNA from Eaton Electrical® greatly increases the functionality of Cutler-Hammer ***IT.*** communicating products, allowing monitoring and control for ***IT.*** I/O and ***IT.*** motor control devices. The D77D-DNA concentrates all data from these devices into a single DeviceNet node. Supported QCPort devices include the D77A I/O products, the D77C-QCPort Cover Control, and the D77B-QSNAP (QCPort Starter Network Adapter Product).

To simplify the configuration of the D77D-DNA, a single press of the Auto Configuration button sets the system up for default operation. This automatically configures the DeviceNet I/O assemblies to the QCPort system devices. The data from these devices are assembled into single input and output messages.

For more information on the ***IT.*** family of products, visit our Web site at: www.eatonelectrical.com/it

Features and Benefits

The ***IT.*** D77D-DNA includes the following significant features:

- Communication to DeviceNet consuming one DeviceNet MAC ID
- Control of all ***IT.*** communicating devices connected to the Adapter
- Manually set MAC ID and baud rate; configuration using a software application is not required for normal operation
- Single button press auto configures the Adapter, setting up the system for default operation
- Advanced configuration using CH Studio
- Two independent and isolated QCPort (communication) channels
- CPU power from QCPort
- QCPort Isolated from DeviceNet
- Status LEDs for DeviceNet, QCPort and module health
- Configuration of QCPort devices over DeviceNet
- Upgradeable firmware
- Small package size
- DIN rail mountable

Safety

The following safety statements relate to the installation, setup and operation of the Cutler-Hammer ***IT.*** D77D-DNA.

Notice

Make sure you read and understand the installation procedures in this manual before you attempt to operate or set up the equipment.

⚠ WARNING

This instruction manual should be used for proper installation, setup and operation of the ***IT.*** D77D-DNA. Improperly installing and maintaining this product can result in serious personal injury or property damage. Before attempting installation, setup or operation, read and understand this entire manual.

⚠ WARNING

Only apply 24V DC to the D77D-DNA connectors and terminals. Use of any other voltage may result in personal injury, property damage and damage to the ***IT.*** D77D-DNA.

⚠ WARNING

To provide continued protection against fire or shock hazard, the complete ***IT.*** D77D-DNA must be replaced if it becomes inoperative.

Environmental Ratings

Table 1: Environmental Ratings

Category	Description	Specification
Transportation/Storage	Temperature	-50°C – 80°C [-58°F – 176°F]
	Humidity	5 – 95% non-condensing
Operating	Temperature	-25°C to 55°C [-13°F to 131°F]
	Humidity	5 – 95% non-condensing
	Altitude	Above 2000 meters [6600 feet] consult factory
	Shock (IEC 68-2-27)	15G any direction for 11 milliseconds
	Vibration (IEC 68-2-6)	5 – 150 Hz, 5G, 0.7 mm maximum peak-to-peak

Approvals/Certifications

Table 2: Approvals/Certifications

Standard	Approval/Certifications
Agency Certifications	ODVA Conformance Tested, Group 2 Slave, No UCMM UL 508 CE (Low Voltage Directive) CUL (CSA C22.2 No. 14)
Radiated and Conducted Emissions	EN 5011 Class A
Electrical/EMC	
• ESD Immunity (IEC 61000-4-2)	±8 kV air, ±4 kV contact
• Radiated Immunity (IEC 61000-4-3)	10 V/m, 80 – 1000 MHz, 80% amplitude modulation @ 1 kHz
• Fast Transient (IEC 61000-4-4)	±2 kV supply and control ±1 kV communications
• Surge (IEC 61000-4-5)	±1 kV line-to-line ±2 kV line-to-ground
• RF Conducted (IEC 61000-4-6)	10V, 0.15 – 80 MHz
• Magnetic Field (IEC 61000-4-8)	30 A/m, 50 Hz
Ingress Protection Code	IP20

DeviceNet Codes

Table 3: DeviceNet Codes

Description
Vendor ID 0x44 (68 Dec)
Product Code 0x1000 (4096 Dec)
Device Type 0x0C (12 Dec)

Module Current Draw

Table 4: Module Current Draw

Description	Specification
DeviceNet	70 mA
Channel A QCPort	50 mA
Channel B QCPort	15 mA

Communication Specifications

Table 5: Communication Specifications

Description	Specification
I/O DeviceNet Size Max	128 bytes input 128 bytes output
DeviceNet Baud Rates	125K, 250K, 500K
QCPort Channels	Channel A and Channel B (independent from each other)
Max QCPort Device	63 CHA 63 CHB

Catalog Numbering System

There is only one Catalog Number: D77D-DNA.

January 2004

Physical Features

Physical Description

The following figure illustrates the various features of the ***IT.*** D77D-DNA.

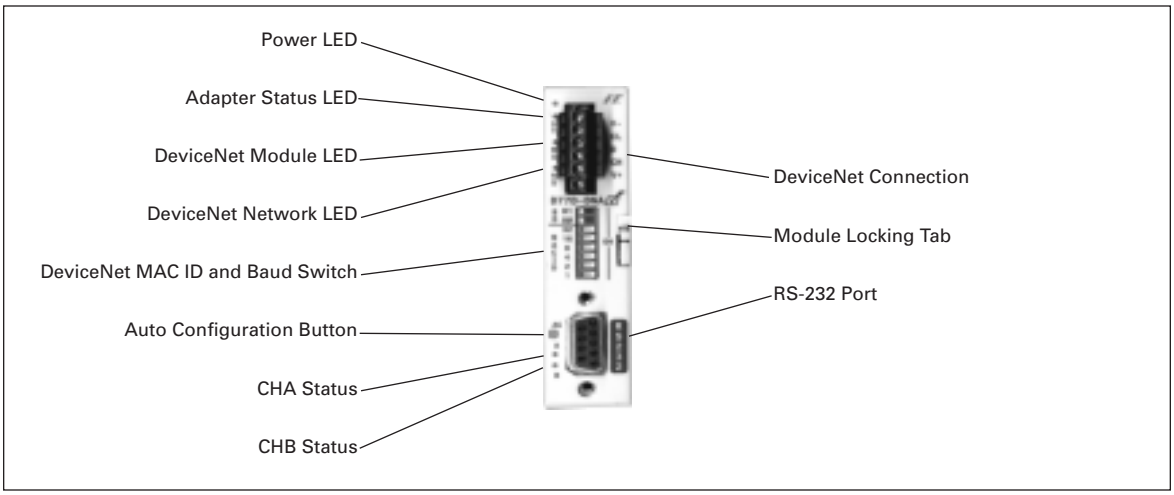

Figure 1: D77D-DNA Front Features

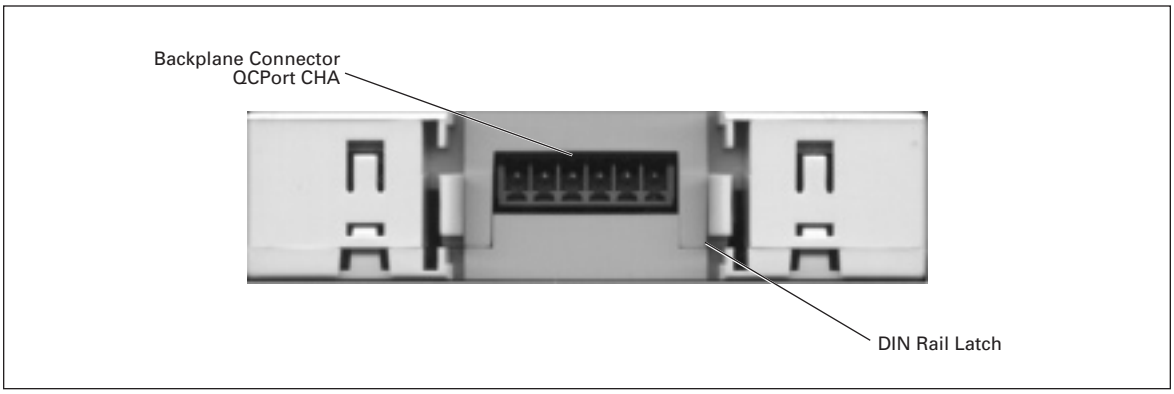

Figure 2: D77D-DNA Back Features

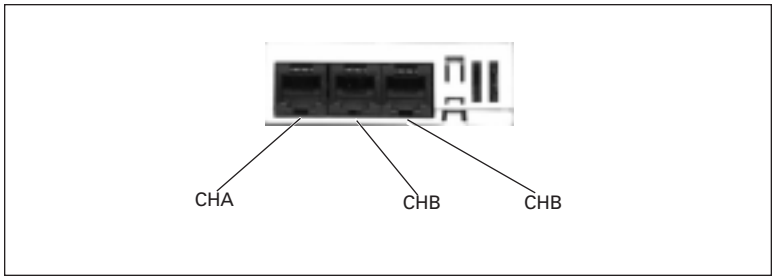

Figure 3: D77D-DNA QCPort Connections

Dimensions

The following figures illustrate the dimensions of the ***IT.*** D77D-DNA and ventilation space requirements for the device.

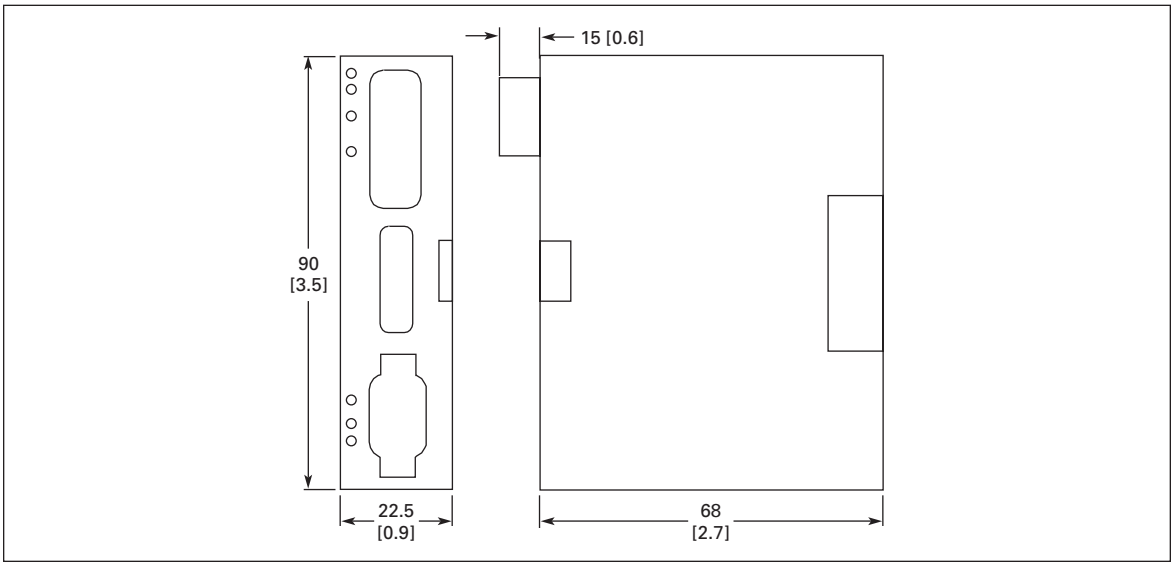

Figure 4: D77D-DNA Dimensions, mm [in]

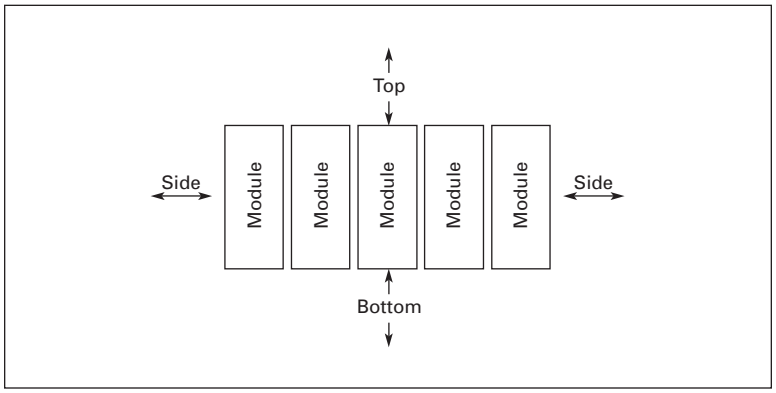

Figure 5: Device Ventilation

Note: Allow a minimum of 50 mm [2 in] of ventilation space on the top and bottom of each device and to each side of a grouping of devices.

Power Supply Requirements

Power from multiple sources is required for normal operation of the D77D-DNA. The D77D-DNA operates from power supplied on QCPort Channel A. The isolation between QCPort and DeviceNet is performed at the DeviceNet communication processor.

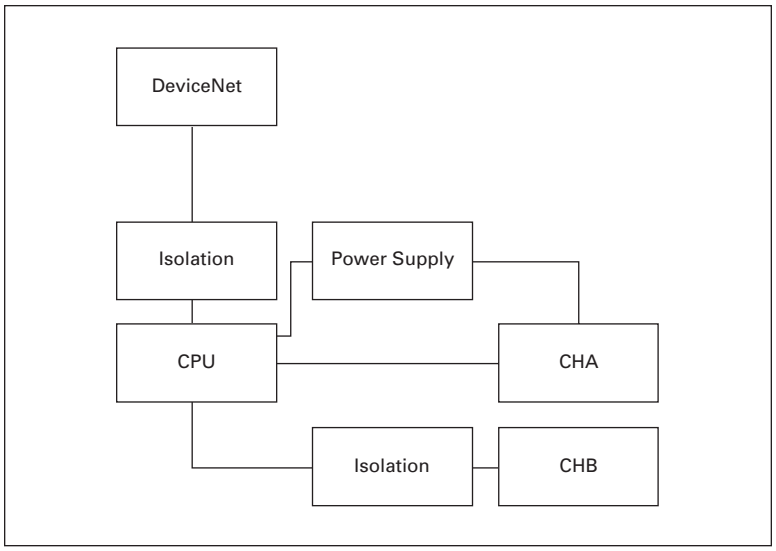

Figure 6: D77D-DNA Power Isolation

Operation

This section provides details about the following features and aspects of D77D-DNA operation:

- Auto Configuration
  - Overview
  - Preparation
  - Soft configuration
  - Hard configuration
- Adding or removing devices from the scanlist
- Replacing an existing device
- Typical application
- Scanning
- Control words
- I/O mapping
- Status LEDs

Auto Configuration

Overview

When an auto configuration is performed, the D77D-DNA assembles the I/O data on DeviceNet for the devices on QCPort channels CHA and CHB. The data is assembled by QCPort channel and then in ascending order by device Group ID (address switch setting on device) using the default I/O assembly for each device. For further assistance on the I/O size and how data is mapped within the data packets, refer to the user manual for that device or refer to CH Studio for on-line help.

Once the QCPort system is assembled, powered and properly addressed, one of two types of auto configuration can be performed. The procedure for performing a Soft Configuration or Hard Configuration starts on **Page 9**.

No additional configuration of the D77D-DNA is required for normal operation after the auto configuration is performed.

Note: Use CH Studio when it is necessary to configure enhanced features.

When an auto configuration is performed, each device is set (or reset) to non critical. Non critical is defined as a device that is not required to be on-line or present for scanning to occur on the selected QCPort channel. This setting is configurable using CH Studio or a DeviceNet management tool that can use an EDS file.

Preparation

Prior to performing an auto configuration procedure, take the following steps to ensure a properly assembled system.

- Verify that all devices are set to a unique Group ID. For Group ID settings above the Group ID switch range, CH Studio is required.
- Verify the sizing of the power supply.
- Check that QCPort is properly wired and properly terminated.
- Refer to MN05001002E (*QCPort System Installation and Planning Guide*) for further information on QCPort System design.

When the system is powered properly and DeviceNet is powered and connected properly, the status LEDs should be in the following state:

Table 6: Proper State of LEDs

LED	State
Power LED	Solid Green
Adapter Status LED	Blinking Green
D77D-DNA Module Status LED (MS)	N/A
DeviceNet Network Status LED (NS)	N/A
CHA Status	Off/Intermittent Flash
CHB Status	Off/Intermittent Flash

For further information on LEDs, see “Status LEDs.”

Soft Configuration

Performing a soft configuration reconfigures the internal QCPort scan list to match all physically connected devices on CHA and CHB. It generates the DeviceNet I/O assemblies that contain the I/O information for these connected devices.

- Erases the old QCPort scan list and creates a new scan list
- Erases the old DeviceNet I/O assemblies and creates new DeviceNet I/O assemblies
- Leaves the QCPort device parameter unchanged

Note: If an active network needs to be reconfigured, the DeviceNet scan of the specific D77D-DNA must cease. If the Auto Configuration button is pressed during DeviceNet network scanning of the D77D-DNA, configuration will not occur.

1. Set each QCPort device to a unique non zero Group ID (per QCPort channel) using the manual Group ID switch. To set the Group ID to an extended address greater than the setting on the switch, use CH Studio.
2. Apply power to the QCPort interconnect system for each channel that has QCPort devices on it. This ensures that each device is powered and that the D77D-DNA is powered.
3. Using a pointed tool (such as a ball point pen), lightly press the Auto Configuration button and hold for five seconds. During this time, the D77D-DNA status LED will turn on solid green. After three seconds, the D77D-DNA status LED blinks three times in one second and then goes off, signaling the start of the Soft Configuration process. At this time, release the AC button.

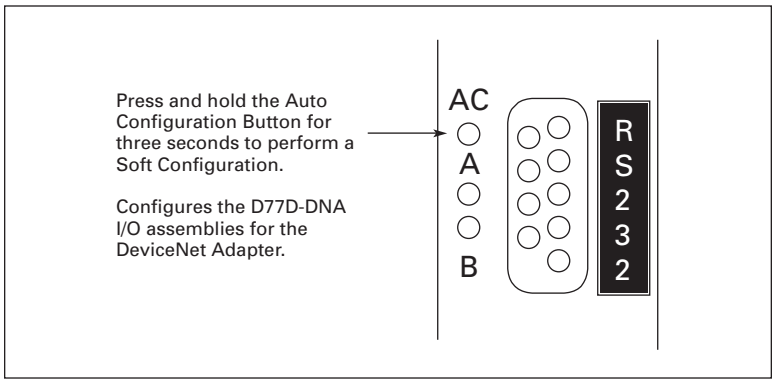

Figure 7: Soft Configuration

While the Soft Configuration process is taking place, the Adapter status LED will be off. After the Adapter status LED returns to the operating state (solid or a slow flashing), the D77D-DNA will be operational on DeviceNet.

None of the QCPort devices may be faulted while performing an I/O Configuration. To verify that the devices are not faulted, verify that no device has a rapid flashing status LED. The status LED for most devices is in upper right of the product and may not be marked. A rapid flash is 40 milliseconds on, 40 milliseconds off.

Note: If, for any reason, the system is not configured properly, when the Auto Configuration button is pressed the MS LED will go to solid red or flashing red. This indicates that further configuration is required. For example, this would occur if two devices on the same QCPort channel have the same Group ID.

Hard Configuration

Performing a Hard Configuration reconfigures the internal QCPort scan list to match all physically connected devices on CHA and CHB. It generates the DeviceNet I/O assemblies that contain the input/output information for these connected devices. **In addition, the QCPort device parameters for all devices on QCPort CHA and CHB are set to "factory default."**

- **Sets all QCPort device parameters to the "factory default" settings**
- Erases the old QCPort scan list and creates a new scan list
- Erases the old DeviceNet I/O assemblies and creates new DeviceNet I/O assemblies

⚠ WARNING

If any connected device has been custom configured, a Hard Configuration will return the device's parameters to "factory default."

1. Set each QCPort device to a unique non zero Group ID (per QCPort channel) using the manual Group ID switch.
2. If CHB is powered separately from CHA, CHB must be energized.

3. Using a pointed tool (such as a ball point pen), lightly press the Auto Configuration button **while applying power to CHA and the D77D-DNA**. You must hold the AC button during the power-up for a minimum of 5 seconds to begin the Auto Configure process. During this time, the D77D-DNA Status LED will be solid green. Once it is viewed that the Status LEDs on the QCPort devices change from fast flashing to a slow flash (mostly off), the AC button can be released.

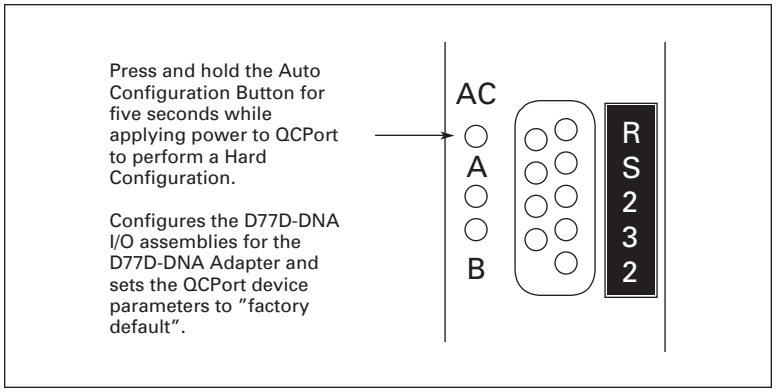

Figure 8: Hard Configuration

While the Hard Configuration process is taking place, the Adapter status LED will be off. After the Adapter status LED returns to the operating state (solid or a slow flashing), the D77D-DNA will be operational on DeviceNet.

None of the QCPort devices may be faulted while performing an auto configuration. To verify that the devices are not faulted, verify that no device has a rapid flashing status LED. The status LED for most devices is in upper right of the product and may not be marked. A rapid flash is 40 milliseconds on, 40 milliseconds off.

Note: If, for any reason, the system is not configured properly, when the Auto Configuration button is pressed the MS LED will be solid red or flashing red. This indicates that further configuration is required. For example, this would occur if two devices on the QCPort system have the same Group ID.

Adding or Removing Devices from the Scan List

If at any time devices are added or removed from the original scan list, the I/O assemblies will have to be revised using the Soft Configuration procedure or CH Studio. When a Soft Configuration is performed, it erases the old DeviceNet I/O assemblies and creates new ones based on the remapped information from QCPort CHA and CHB.

When adding a new device to the scan list, it is desirable for the I/O assemblies to change as little as possible (to minimize PLC programming changes). To perform this, add the new device at a Group ID that is larger than the largest ID currently on CHA (when only CHA is used), when both channels are used, add to CHB. This will add the device to the end of the I/O assembly, minimizing the programming changes within the controller.

When removing a device from the scan list, set the device for non critical in the D77D-DNA. This will allow the D77D-DNA to actively scan the QCPort devices and serve up data that are all zeros for the device that has been removed. If the configuration button is pressed, it will reconfigure the assemblies for the D77D-DNA, which may require controller data register reprogramming.

⚠ WARNING

When adding or removing a device and performing the Soft Configure procedure, the I/O assemblies on the DeviceNet side are erased and recompiled. Because of this, data in the controller registers may be different than prior to re-configuration. Care should be taken to verify the I/O assembly mapping before bringing the controller/D77D-DNA back on-line.

Replacing a Pre Hot Swap Device on QCPort

Pre hot swap devices include D77D-DNA versions 1.29 and earlier, D77A-I/O 1.0 and earlier and Cover Control 1.03 and earlier.

When replacing a pre hot swap device on QCPort, you will follow one of two procedures depending on if the new device is preconfigured "out of box" or not preconfigured. For both of these procedures to work properly, the new device must have its configuration parameters identical to the replaced device. An example of device configuration parameters include input debounce times, safe state behaviors or trip delay times.

Note: The new device must have the same device parameter values as the replaced device. If the replaced device required a tool to set up initially, a tool will be also be required to set up the new device.

If the Device Is Preconfigured

This refers to a device that uses factory defaults and is set to out of box, or a device that has been preconfigured as described in the next section.

For a New Device from the Factory, and No Configuration Parameters Require Changes

1. Set the new device to the correct Group ID.
2. Replace the damaged device with a new device.
3. Disable the scan bit, **Table 7**, for the selected channel the device is on.
4. The D77D-DNA will recognize the new device and accept it into the scan list providing for normal operation. The status LED of the replaced device and the CH status LED on the D77D-DNA will provide visual indication when the device becomes active and accepted into the D77D-DNA's scan list.
5. Enable the scan bit to continue normal operation.

For an Existing Device (Spare), and No Configuration Parameters Require Changes

1. Insert the device into the system
2. Perform an "out of box" reset on that device (set address to 0 and toggle address from 0 to 1 five times). This will set all configuration parameters and communication parameters to "out of box" defaults.
3. Set the device to the correct address.
4. Disable the scan bit, **Table 7**, for the selected channel the device is on.
5. The D77D-DNA will recognize the new device and accept it into the scan list providing for normal operation. The status LED of the replaced device and the CH status LED on the D77D-DNA will provide visual indication when the device becomes active and accepted into the D77D-DNA's scan list.
6. Enable the scan bit to continue normal operation.

How to Preconfigure a Device

When a device needs to be replaced that required a tool to set up (any configuration parameters were changed from default), a tool will once again need to be used to set the new one up. This procedure will require a spare D77D-DNA to impact the running system as little as possible.

1. Set the new device to the correct Group ID.
2. Connect the device to CHA of a spare D77D-DNA. (A terminator must also be attached.)
3. Power the system by applying power to CHA.
4. Using CH Studio Component Manager **Reset all QCPort Devices to their factory defaults and rebuild D77D-DNA device list** (this is a reset service).
5. Configure the device with the correct configuration parameters; this can be done manually or by using the Synchronize function in CH Studio Component Manager. The Synchronize function ensures the parameters are identical.
6. Insert the preconfigured device into the system.
7. Disable the scan bit, **Table 7**, for the selected channel the device is on.
8. The D77D-DNA will recognize the new device and accept it into the scan list providing for normal operation. The status LED of the replaced device and the CH status LED on the D77D-DNA will provide visual indication when the device becomes active and accepted into the D77D-DNA's scan list.
9. Enable the scan bit to continue normal operation.

Replacing a Hot Swap Device on QCPort

Hot swap devices include D77D-DNA versions 1.30 and later, D77A-I/O 1.01 and later and Cover Control 1.04 and later.

Hot swap devices can be moved from one address to another as long as the I/O configuration (data) and device type match. Therefore a bucket can be moved from one address to another address as long as the I/O configurations are the same between both buckets.

⚠ CAUTION

When performing a hot swap, since the configuration parameters do not have to match the configuration settings such as loss of communication behavior, initial state and threshold values may be different between the old device and the new device.

To Hot Swap a Device from One Location to Another

1. Verify that the device types match (are they the same device?)
2. Verify that the I/O configuration parameters match.
3. Remove the device from the one location.
4. Change the Group ID to the new address.
5. Insert the device into the new location.

Note: Scanning does not have to stop for the device to be hot swapped and it may take up to 15 seconds for the device to be accepted in the scan list. When the Status LED matches the operation of the devices around it you know that it has been accepted. For example if the system is scanning the status LEDs should be mostly on, when the device is hot swapped, the status LED will be mostly on.

To Hot Swap a Factory Replacement device

1. Verify that the device types match (are they the same device?)
2. Did the old device have factory I/O configuration? If yes go to next step, if no, the device will have to follow steps 1 to 6 in the **How to Preconfigure a Device**.
3. Insert the device into the new location.

Note: Scanning does not have to stop for the device to be hot swapped and it may take up to 15 seconds for the device to be accepted in the scan list. When the Status LED matches the operation of the devices around it you know that it has been accepted. For example if the system is scanning the status LEDs should be mostly on, when the device is hot swapped, the status LED will be mostly on.

Typical Application

The following figure illustrates a typical D77D-DNA application for a motor control center.

This application has many nodes (not shown) on DeviceNet, and the D77D-DNA is a single node on that network. The D77D-DNA presents the QCPort devices on CHA and CHB as I/O assemblies on DeviceNet so the controller can monitor and control the I/O and motor control connected to the D77D-DNA. In an effort to simplify the graphic, the power supply and terminators are not shown in this example.

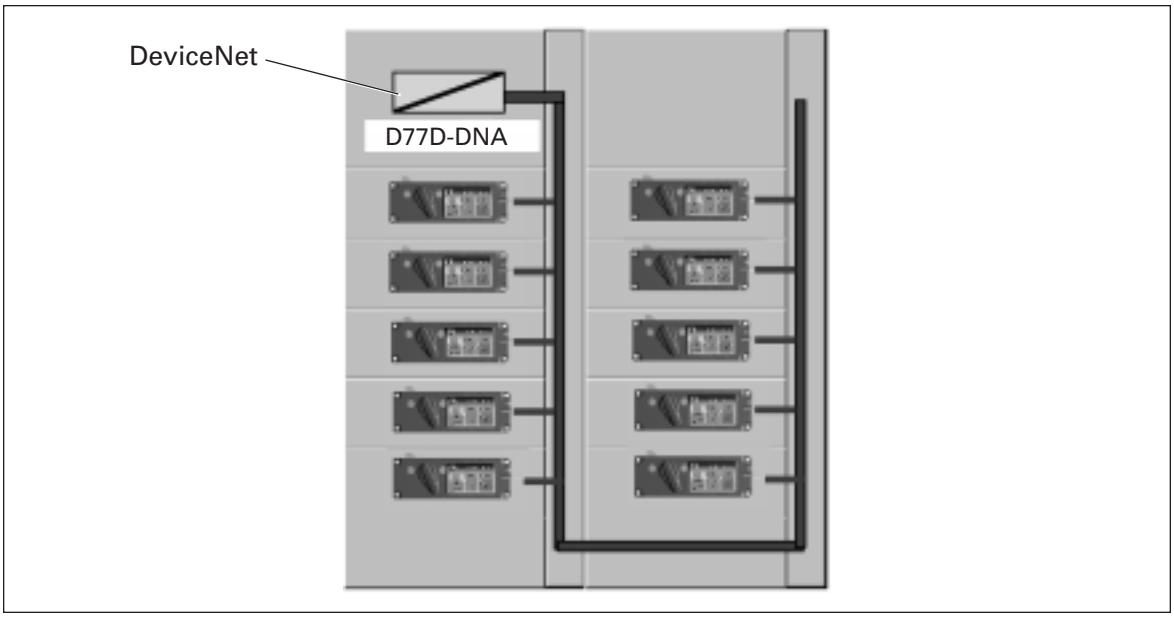

Figure 9: Typical D77D-DNA Application

Users are free to place QCPort devices on either channel based on physical location.

Due to the way the DeviceNet I/O assemblies are created, all devices that produce or consume more than one byte of data are word aligned (even byte boundaries). Devices are placed on even byte boundaries so that registers in the system controller can more easily manipulate 16 bit data without having to span registers. For this reason, if a system is designed with the order of devices on QCPort being a 1 byte, 4 byte, 1 byte, 4 byte message size, the DeviceNet input assembly will not be as efficient as if the system were designed with the order 4 byte, 4 byte, 1 byte, 1 byte. Another solution would be for the user to place the large data devices on one channel and the small data devices on another. An example of this is described in the I/O Mapping section on **Page 19**.

Separating the devices can also provide efficient handling of fault condition behaviors. The application may warrant that I/O and motor control have different behaviors for loss of devices and critical node behavior. The separation provides for each channel to exhibit unique behaviors specific to the type of device and the function.

Scanning

The D77D-DNA acts as a subscanner for the QCPort devices. The subscan places QCPort input data in DeviceNet shared memory and sets the QCPort outputs from DeviceNet shared memory. The CPU prevents data tearing by not allowing QCPort and DeviceNet to gain access to the shared memory at the same time.

The QCPort scan is master/slave poll request/response. Since the slave devices only talk when talked to, collisions are eliminated, providing for a deterministic scan time. Both channels are independent and the D77D-DNA scans each channel simultaneously and asynchronously.

Note: A DeviceNet I/O poll connection must be established before the D77D-DNA begins scanning QCPort.

Control Words

The input and output DeviceNet assemblies have a control word as the first word of the assembly. The output control word provides control of the QCPort channels while the input control word provides feedback regarding the health of the QCPort channels while also providing diagnostics.

Output Control Word

The output control word is the first word of data in the DeviceNet Poll output assembly message. This word controls the activity on each of the QCPort channels.

Note: These bits must be set to true (1) from your control program.

Table 7: Output Control Word

Bit	High Byte	Low Byte	Description
0	Activate Scan CHB	Active Scan CHA	0 – I/O scan will not occur on the selected channel and all devices will be in the safe state and off-line.
			1 – I/O scan will occur on the selected channel, the devices will be on-line and operating in an on-line state.
1	Reserved	Reserved	Must be 0
2	Reserved	Reserved	Must be 0
3	Reserved	Reserved	Must be 0
4	Reserved	Reserved	Must be 0
5	Reserved	Reserved	Must be 0
6	Reserved	Reserved	Must be 0
7	Reserved	Reserved	Must be 0

Table 8: Example Control Word with Only 1 Channel (CHA) Being Scanned

Byte	Bit 7	Bit 6	Bit 5	Bit 4	Bit 3	Bit 2	Bit 1	Bit 0
0	0	0	0	0	0	0	0	1
1	0	0	0	0	0	0	0	0

Table 9: Sample Output Assembly

High Byte (Byte 1)	Low Byte (Byte 0)	Word
Channel B Output Control (reserved)	Channel A Output Control (reserved)	0
Device Output Data	Device Output Data	1
Device Output Data	Device Output Data	…
Device Output Data	Device Output Data	n

Input Control Word

The input control word is the first word of data in the DeviceNet Poll input assembly message. This word provides information on the health of the QCPort channels.

Note: Your control program uses this information to detect fault conditions.

Table 10: Input Status Word

Bit	Byte 1	Byte 0	Description
0	CHB Active	CHA Active	0 – selected channel not scanning
			1 – selected channel scanning
1	CHB Not Ready to Scan	CHA Not Ready to Scan	0 – selected channel scan list registry requirements **have** been met ①
			1 – selected channel scan list registry requirements **have not** been met
2	Faulted Device CHB	Faulted Device CHA	0 – selected channel does not have any faulted devices
			1 – selected channel has at least one faulted device
3	Reserved	Reserved	Must be 0
4	Duplicate Group ID CHB	Duplicate Group ID CHA	0 – no two devices on the selected channel have the same group ID
			1 – more than one device on the selected channel have the same group ID
5	QCPort Config Corrupt CHB	QCPort Config Corrupt CHA	0 – selected channel has a valid registry
			1 – selected channel has a corrupt registry
6	Reserved	Reserved	Must be 0
7	Reserved	Reserved	Must be 0

① Ready to scan means that at the time the system was last commissioned, all requirements including the power on self test, device configuration verification and registry scan list verification have been complete with no errors.

Table 11: Example Status Word of a Healthy System with Only 1 Channel (CHA) Being Scanned

Byte	Bit 7	Bit 6	Bit 5	Bit 4	Bit 3	Bit 2	Bit 1	Bit 0
0	0	0	0	0	0	0	0	1
1	0	0	0	0	0	0	0	0

Table 12: Sample Input Assembly

High Byte (Byte 1)	Low Byte (Byte 0)	Word
Channel B Input Status (reserved)	Channel A Input Status (reserved)	0
Device Input Data	Device Input Data	1
Device Input Data	Device Input Data	…
Device Input Data	Device Input Data	n

I/O Mapping

Sample DeviceNet I/O Mapping

When the assemblies are created, the device data are word aligned (even byte boundaries) for ease of controller data manipulation. Due to this rule, when designing a system it is important to follow specific guidelines to ensure efficient use of DeviceNet data packets.

Following are some very simple rules that govern how the I/O data are assembled:

- All devices that are greater then 1 byte of data are aligned on word boundaries (even byte). A “stuff” byte will be automatically inserted to maintain this rule.
- All devices with a data size of one byte are placed one after the other in the I/O assembly, including at the end of an odd byte size device. If a device (X) has 5 bytes of data, and the next device (Y) has one byte of data, the mapping is as follows:

Table 13: Example I/O Mapping

High Byte	Low Byte	Word
Device X	Device X	n
Device X	Device X	n + 1
Device Y	Device X	n + 2

- When a device that has an odd byte size (greater than one) is placed after a device that has an odd byte size (greater than one), a “stuff” byte is placed at the end to align each device on an even byte boundary.

Note: When “stuff” bytes are added to the DeviceNet message, it will take up unnecessary space in the DeviceNet master scanner and increase the scan time of DeviceNet.

Example 1

Example 1 illustrates an inefficient system design that generates “stuff” bytes in the data in order to properly word align the data.

Note: The **Consumed Data** is the data that is sent from the D77D-DNA to the QCPort device. The **Produced Data** is the data that is sent from the QCPort device to the D77D-DNA.

Table 14: Word Boundary Example 1

Device ID	Produced Message Size (bytes)	Consumed Message Size (bytes)
1	1	1
2	2	1
3	1	1
4	2	1

Table 15: Input Word Boundary Example 1

High Byte	Low Byte	Word
CHB Command (reserved)	CHA Command (reserved)	0
Stuff	Device 1	1
Device 2	Device 2	2
Stuff	Device 3	3
Device 4	Device 4	4

Example 2

A more efficient system design places the devices that have one byte together; in this design the devices take one word total space, thus saving a complete word on DeviceNet and in the DeviceNet Master Scanner. A better, more efficient system design would be as follows.

Table 16: Word Boundary Example 2

Device ID	Produced Message Size (bytes)	Consumed Message Size (bytes)
1	1	1
2	1	1
3	2	1
4	2	1

Table 17: Input Word Boundary Example 2

High Byte	Low Byte	Word
CHB Command (reserved)	CHA Command (reserved)	0
Device 2	Device 1	1
Device 3	Device 3	2
Device 4	Device 4	3

In a comparison of Examples 1 and 2, rearranging the devices saves one complete word.

I/O Mapping

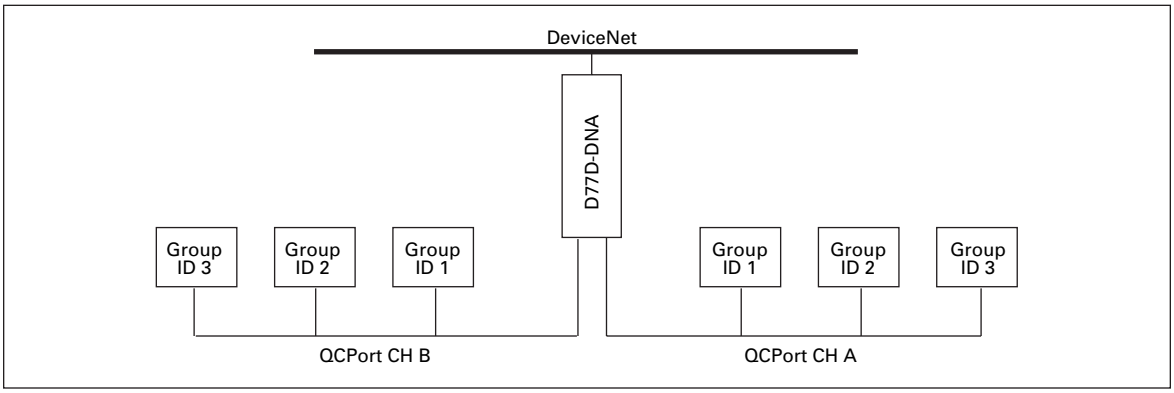

Figure 10: I/O Mapping Example

In regard to the I/O Mapping example in the figure above:

- All devices are connected to CHA and CHB on the D77D-DNA.
- All of the devices are “factory default” with no custom I/O configuration.
- Each device’s group ID is displayed.

The user presses the Auto Configuration button and performs a soft configuration (**Page 9**) for the DeviceNet I/O assemblies. After configuration, the DeviceNet input and output assemblies for this example are as listed in the following two tables.

Table 18: QCPort Device Data Size

Device	Produced Data (see Note)	Consumed Data (see Note)
CHA Group ID 1	2 bytes	—
CHA Group ID 2	1 byte	1 byte
CHA Group ID 3	—	1 byte
CHB Group ID 1	4 bytes	1 byte
CHB Group ID 2	4 bytes	1 byte
CHB Group ID 3	4 bytes	1 byte

Table 19: DeviceNet Poll Input Assembly

Word	High Byte	Low Byte
0	D77D-DNA CHB Input Control	D77D-DNA CHA Input Control
1	CHA ID 1 Data	CHA ID 1 Data
2	Stuff Byte	CHA ID 2 Data
3	CHB Group ID 1 Data	
4		
5	CHB Group ID 2 Data	
6		
7	CHB Group ID 3 Data	
8		

Table 20: DeviceNet Poll Output Assembly

Word	High Byte	Low Byte
0	D77D-DNA CHB Output Control	D77D-DNA CHA Output Control
1	CHA Group ID 3	CHA Group ID 2
2	CHB Group ID 2	CHB Group ID 1
3		CHB Group ID 3

Status LEDs

The status LED is located in the upper left of the D77D-DNA, as pictured in **Figure 1**, D77D-DNA Front Features. The LED's status changes depending on the state of the D77D-DNA.

The following tables list and describe the various states of the D77D-DNA Status LEDs; DeviceNet Module Status, DeviceNet Network Status and QCPort Channels.

Table 21: D77D-DNA Status LED

LED State	Meaning
Off	The Adapter has no power
	The Adapter needs replacing
On	The Adapter is operating properly

Table 22: DeviceNet Module Status LED (MS)

LED State	Meaning
Off	There is no power to the device
Green	Device is operating normally
Flashing Green	Device needs commissioning
Flashing Red	A recoverable fault has been detected
Red	A non-recoverable fault has been detected, the device may need to be replaced
Flashing Green/Red	The device is performing a self test

Table 23: DeviceNet Network Status LED (NS)

LED State	Meaning
Off	No Power on DeviceNet
Flashing Green	No Connection established
Green	A Connection has been established
Red	Device cannot communicate on the network (DupMac or BusOff)
Red/Green Blink	Self Test
	Communication fault

The CHA and CHB status LED is an indication as to the traffic on each of the channels. When a message is sent or received, the LED will be lit. A solid LED or one that is mostly solid indicates healthy QCPort activity.

Table 24: CHA and CHB Status LED

LED State	Meaning
Off	No Power on QCPort or no communication taking place on that channel
Solid Amber	A Connection has been established to all end devices
Flashing	One or more of the devices have a fault and the scanner can not go on-line The scanner is in idle mode (not scanning) The scanner is looking for a faulted device Indicates QCPort traffic

Advanced Configuration

Pressing the Auto Configuration button performs a basic setup of the D77D-DNA and connected devices that is sufficient for most applications. When an application requires that parameters have to be modified from default, use CH Studio. The CH Studio tool is used for configuration, maintenance and monitoring of DeviceNet nodes and QCPort devices.

After going on-line, using CH Studio, the Studio Explorer will display the nodes on DeviceNet and allow the user to "drill" down through the D77D-DNA to view and configure the QCPort devices.

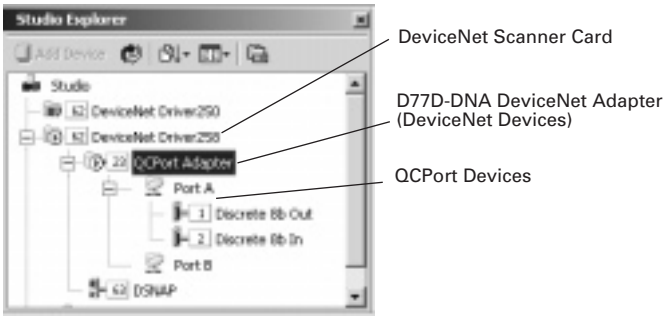

Figure 11: Studio Explorer (Docked View)

Once a DeviceNet node or QCPort device is chosen, the Properties Window will display the attributes and parameters of that device. From this window, node/device parameters can be viewed and modified. This information is also contained within the Property Pages of the node/device that is being viewed by going to the toolbar and selecting View and then Property Pages (Shift + F4).

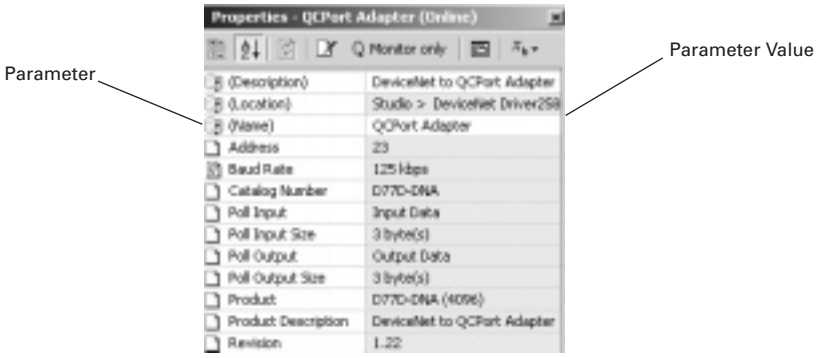

Figure 12: Properties Window

The General tab of the Property Pages provides data on the node that is specific to DeviceNet. Here the MAC ID, Baud Rate, Device Type and other device data is provided. The resets on this page are used for performing DeviceNet specific resets as defined in the CH Studio help and in the DeviceNet Spec release 2.0.

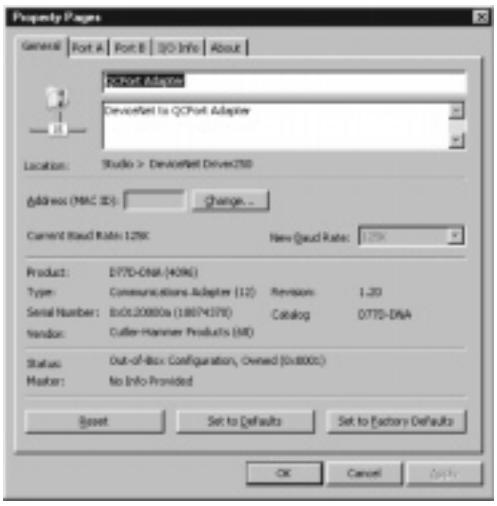

Figure 13: General Tab

Once the D77D-DNA is properly configured, the I/O assembly can be checked by viewing the I/O Info Tab. This tab will provide information concerning the length of the I/O tables and the data that is within the tables.

Figure 14: I/O Information

Run A Report

Once the system is properly configured the I/O data and all the configuration parameters can be viewed by running a report. To run a report on a single D77D-DNA, highlight the D77D-DNA and choose Tasks/Run Report from the toolbar. From this an html report will be generated that has all the I/O mapping and configuration data for each QCPort device. This will aid in programming the controller since the I/O mapping for each device will be clearly mapped out.

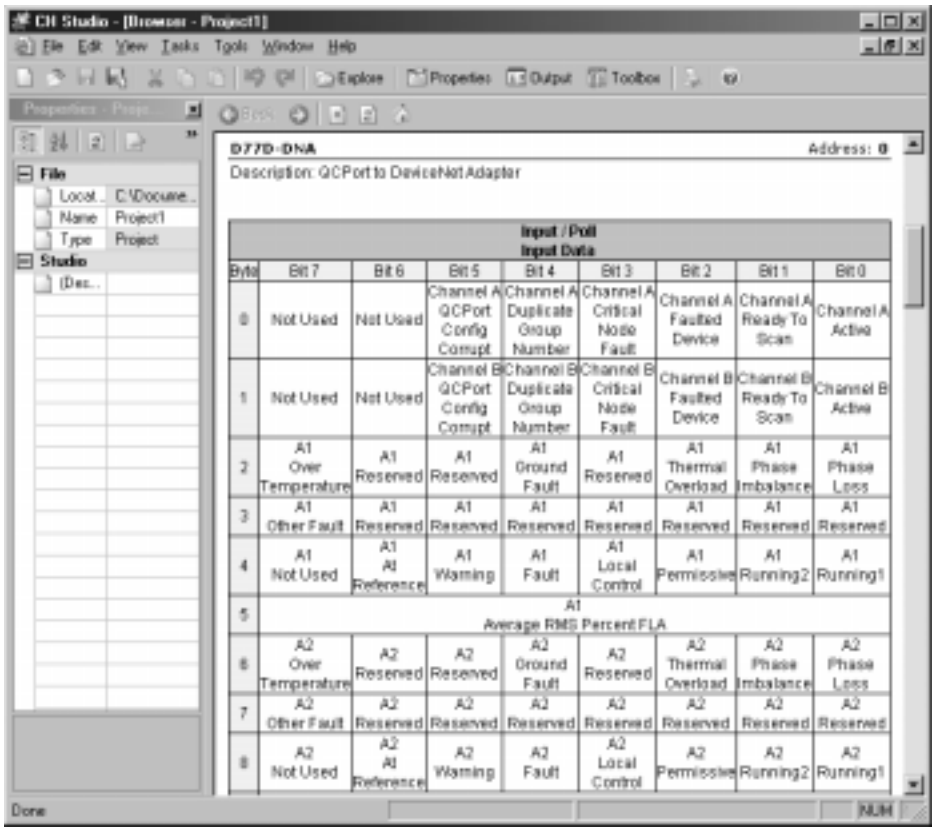

Figure 15: I/O Property Page

Installation

Set the DeviceNet MAC ID and Baud Rate

The MAC ID and baud can only be set through the hardware. A software tool (such as CH Studio) can view the settings for the D77D-DNA MAC ID and baud rate, but cannot be used to modify them.

The MAC ID and baud rate are set using DIP switches on the face of the D77D-DNA. Refer to the following instructions, figure and table when setting the MAC ID and baud rate.

- Moving a DIP switch to the right is ON and moving the switch to the left is OFF. The MAC ID is in binary with the major units numbered to the left of the switch on the side label. Adding up the major units set to ON will provide the MAC ID of the D77D-DNA.

  Example: To set the MAC ID to 25, start from the top (or 32) and set the switches to OFF, ON, ON, OFF, OFF, ON (16 + 8 + 1 = 25).

- The baud rate is set using the configuration switches B0 and B1.

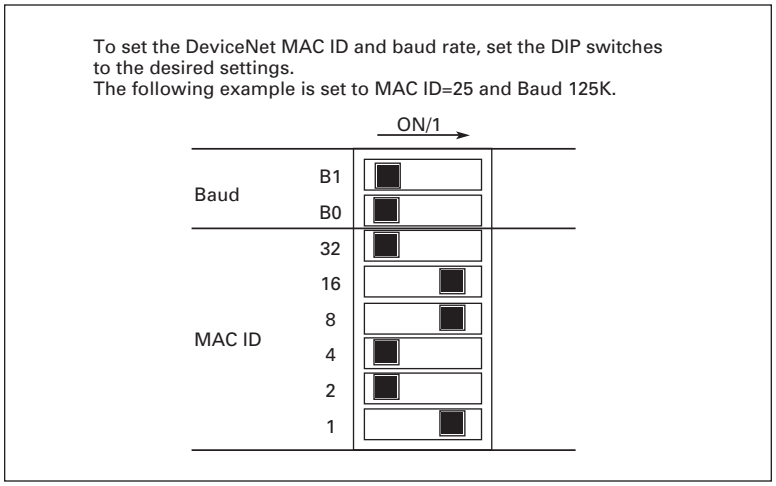

Figure 16: DIP Switch Designation

Table 25: Baud Rate Table

B1	B0	Baud
OFF	OFF	125K
OFF	ON	250K
ON	OFF	500K
ON	ON	Not Allowed

Connect to DeviceNet

The DeviceNet cable is color coded and matches the colors on the DeviceNet connector located at the top of the D77D-DNA. The connector has a screw type positive connection that must be unscrewed to be removed and then screwed back in to eliminate accidental unplugging.

Use one wire per terminal and torque to 0.5 Nm [4.5 lb-in]. If it is necessary to daisy chain the DeviceNet wire, use a ferrule and connect the two wires prior to inserting into the plug.

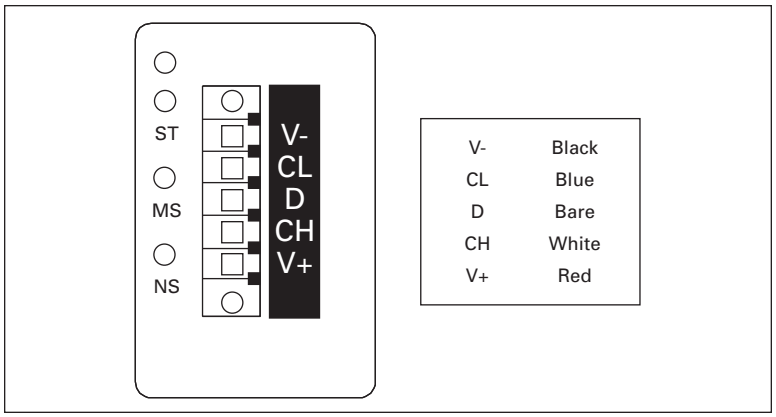

Figure 17: DeviceNet Connection

Installation on a DIN Rail

Use one of the following two procedures to install the Adapter on a DIN rail:

- Install on a DIN Rail (no backplane)
- Install on a DIN Rail with backplane

Install on a DIN Rail (No Backplane)

Prepare Module for Installation

The DIN rail locking tab is on the right middle of the face of the D77D-DNA. When installing the D77D-DNA on a DIN rail, verify that the slide of the DIN Rail Lock is extended to the unlocked position.

Using a screwdriver or a fingernail, gently pull out the locking tab located at the side center of the D77D-DNA as shown in **Figure 18**.

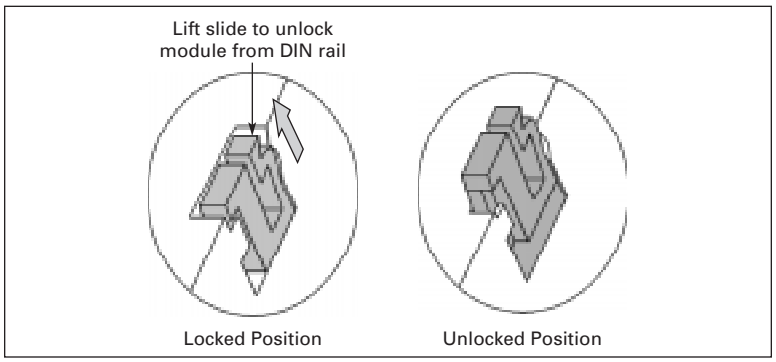

Figure 18: Unlock DIN Rail Locking Tab

Install Module

The module is now ready for installation on the DIN rail.

CAUTION

Do not "rock" the D77D-DNA module onto the DIN rail. The rocking action could damage the module.

1. The module must always be inserted perpendicular onto the DIN rail. **Push the module straight back** onto the DIN rail.
2. Depress the locking tab to secure the module to the DIN rail.

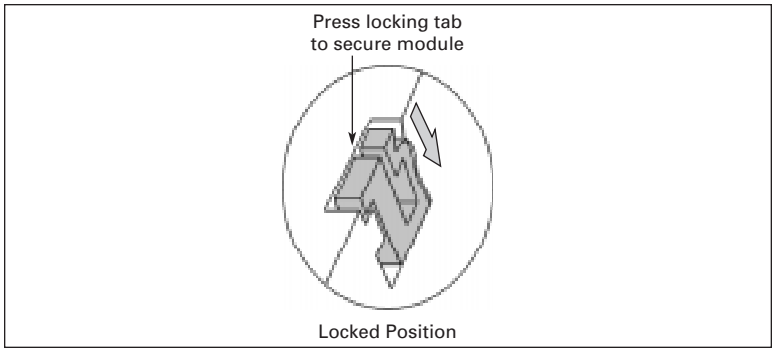

Figure 19: Lock DIN Rail Locking Tab

Notice

After the D77D-DNA is installed, interconnects will need to be installed; see the ***IT.*** *QCPort System Install and Planning Guide* (Publication MN05001002E) for more information.

Install on a DIN Rail with Backplane

Prepare Module for Installation

The DIN rail locking tab is on the right middle of the D77D-DNA. When installing the D77D-DNA on a DIN rail, verify that the slide of the DIN Rail Lock is extended to the unlocked position.

Using a screwdriver or a fingernail, gently pull out the locking tab located at the side center of the D77D-DNA as shown in **Figure 20**.

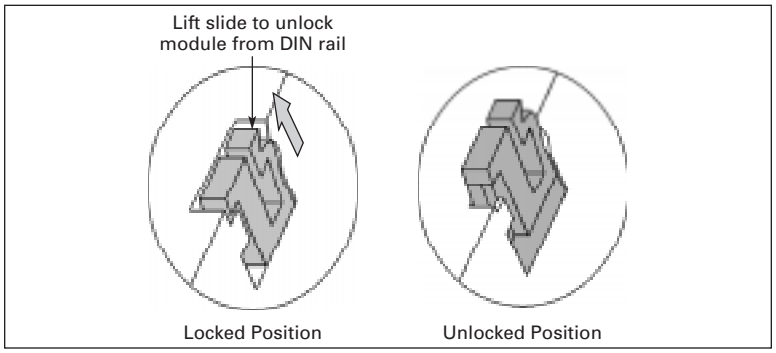

Figure 20: Unlock DIN Rail Locking Tab

Install Module

The module is now ready for installation on the DIN rail.

⚠ CAUTION

Do not "rock" the D77D-DNA module onto the DIN rail. The rocking action could damage the module.

1. Line the center of the module up with the backplane connector on the DIN rail. Ensure the backplane connector is installed with the arrows up. The module must always be inserted perpendicular onto the DIN rail.

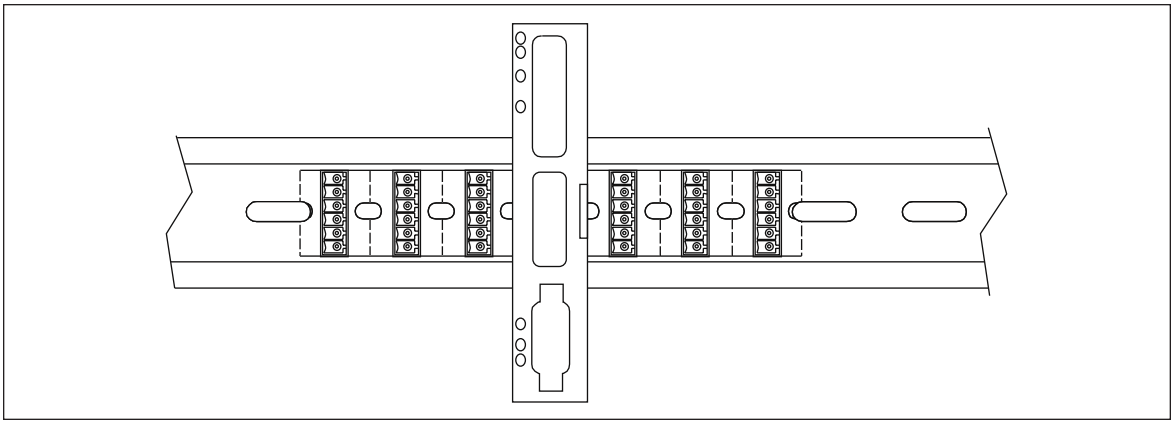

Figure 21: Adapter Installation on a Backplane

2. Push the module straight back onto the DIN rail and backplane connector.
3. Depress the locking tab to secure the module to the DIN rail.

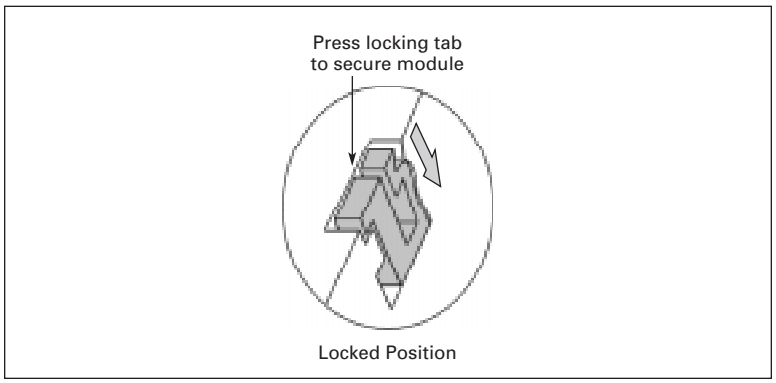

Figure 22: Lock DIN Rail Locking Tab

Replace Existing Module

To replace an existing D77D-DNA, first remove the old one.

1. Remove all connectors (DeviceNet and QCPort) from the Adapter.
2. Using a screwdriver or a fingernail, gently pull out the locking tab located at the side center of the D77D-DNA as shown in **Figure 23**.

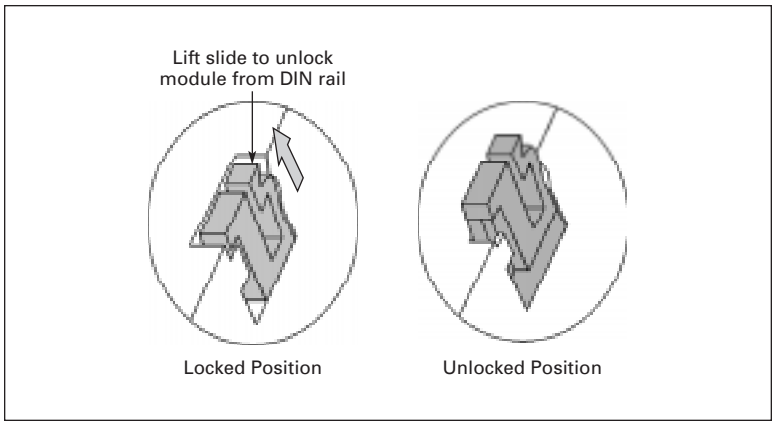

Figure 23: Unlock DIN Rail Locking Tab

3. Remove the old module by pulling straight off the DIN rail.
4. Align the new module where the old one was removed. The module must always be inserted perpendicular onto the DIN rail. **Push the module straight back** onto the DIN rail.
5. Depress the locking tab to secure the module to the DIN rail.

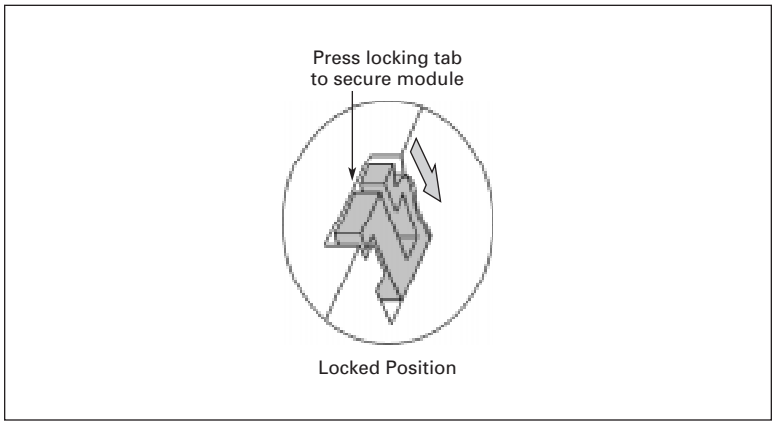

Figure 24: Lock DIN Rail Locking Tab

6. Reconnect the DeviceNet and QCPort connectors.
7. Reconfigure the device according to the I/O Configure procedure in “Operation” or with a configuration tool.

Connect Devices

Connections/Interconnects

Connecting the D77D-DNA and other ***IT.*** family products involves using one or more of the QCPort interconnects. The D77D-DNA employs two types of connectors — one is the QCPort backplane and the other is the QCPort cable. These interconnects provide the QCPort products with both power and communications.

The QCPort backplane fits within the DIN rail and has plugs on it that connect one module to another module seated on the DIN rail. The QCPort backplane supports the power and communication for QCPort and is a passive device. The QCPort cable uses the RJ style connectors that are ordered in standard lengths.

For more information on making interconnects and applying interconnects, refer to the ***IT.*** *QCPort System Install and Planning Guide* (Publication MN05001002E).

Connections to the QCPort Channels

The D77D-DNA has two independent QCPort channels: CHA and CHB. CHA has connections on the backplane (plug) and the RJ-12 port closest to the front of the D77D-DNA. CHB has two RJ-12 connections, the two closest to the front of the D77D-DNA.

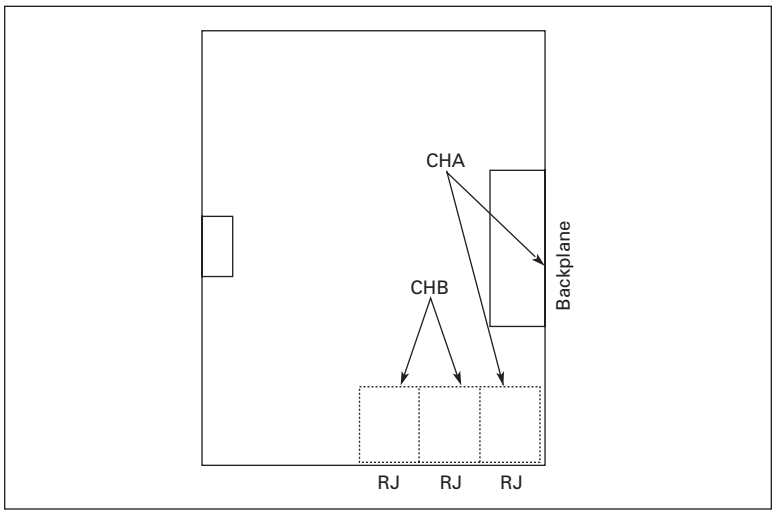

Figure 25: QCPort Channels

QCPort Backplane

The QCPort backplane is used when connecting Adapter and I/O products on a DIN rail. The interconnect fits inside the channel of the DIN rail and provides for connection of power and communication to Adapter and I/O products.

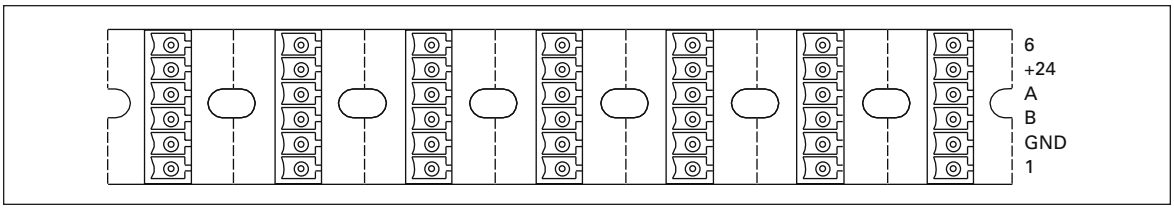

Figure 26: QCPort Backplane

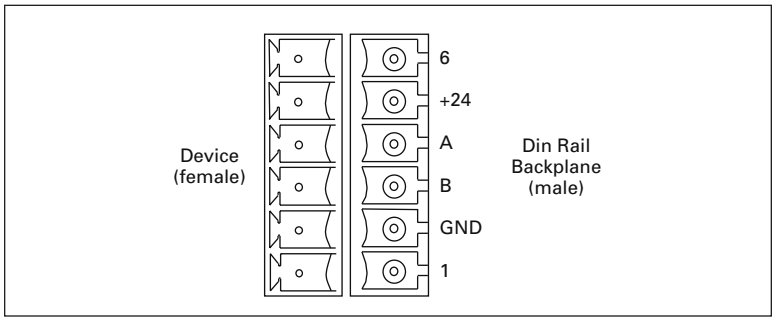

Figure 27: Device/QCPort Backplane

Short Run Interconnect

To connect the D77D-DNA to devices without using a QCPort backplane, use the RJ style connectors that are located at the bottom of the D77A I/O module. There are two connections located next to each other that are in parallel with each other, this allows daisy chaining using pre-manufactured cables. There are standard sizes for the pre-manufactured cables. These sizes are listed in the “Renewal Parts” portion of “Troubleshooting and Maintenance.”

When making this interconnect, refer to the ***IT.*** *QCPort System Install and Planning Guide* (Publication MN05001002E) for the recommended cable and connections.

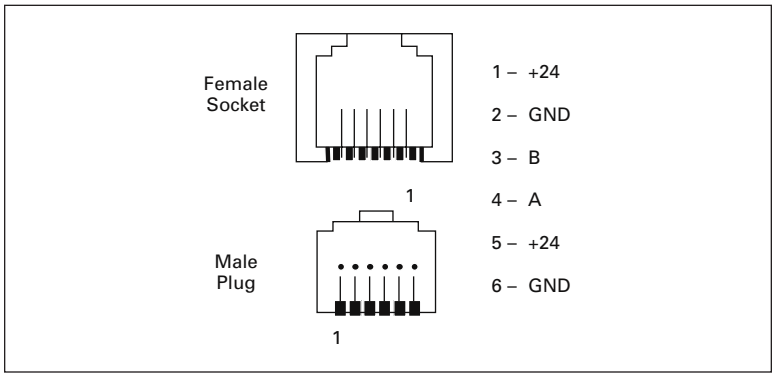

Figure 28: RJ Connector

Troubleshooting and Maintenance

Renewal Parts

There are no renewal parts on the D77D-DNA; the only related parts are the following accessories.

Table 26: Accessories

Description	Part Number
7-Position QCPort Backplane	D77E-BP7
12-Position QCPort Backplane	D77E-BP12
20-Position QCPort Backplane	D77E-BP20
RJ QCPort Terminator	D77E-TERRJ
25 cm Powered QCPort Interconnect	D77E-QPIP25
1 Meter Powered QCPort Interconnect	D77E-QPIP100
2 Meter Powered QCPort Interconnect	D77E-QPIP200
3 Meter Powered QCPort Interconnect	D77E-QPIP300
QCPort Terminator and Power Tap	D77E-QPLR
24V DC 1 Amp Power Supply	D77E-PS1

Troubleshooting

Use the following chart for assistance in troubleshooting the D77D-DNA; the chart contains the most common faults and corrective actions.

Table 27: Troubleshooting Chart

Observation	Possible Cause/Action
None of the LEDs are illuminated	Verify that power has been applied to CHA of the D77D-DNA, if power is present (wired correctly) then the D77D-DNA needs to be replaced.
I/O configuration starts, but will not complete	Verify that all the devices on CHA and CHB are properly powered, and have a unique Group ID. All status LEDs on the devices should have the same blink pattern (slow blink or a mostly off blink pattern).
CHA and/or CHB LEDs are off or mostly off	Scanning has not been enabled on that QC Port channel. Verify that the Active Scan bit is set in the output control word, and that there are no critical devices missing from the scan list.
	No devices have been found during Auto Configuration. Recheck QCPort wiring and termination.
A replacement device will not be accepted into the scan list	Verify that all parameters in the device are set to the original device.
The control master will not connect to the D77D-DNA	Verify that the I/O sizes for the D77D-DNA are the same size as in the DeviceNet master scanner. To check the I/O size, read the sizes from Class 5 (DeviceNet Connection Object), Instance 2 (poll I/O connection) attributes 7 and 8 (produced and consumed size). This has to match the DeviceNet master scan list size.
All devices on a channel are in safe state	Check the CH LED. If it is off, there is no communication, which would indicate that the channel has no power or the CH scan bit has not been set in the output control word.
The Active Scan bit has been set, but the CH A/B Active bit is at false/zero	The scan list may be corrupt.
	The channel may not have 24V DC power on it.
	There are no devices on that channel.

Appendix A: Supported DeviceNet Objects

Table 28: Objects

Object	Name	Page
0x01	Identity	**36, 38, 41**
0x03	DeviceNet	**43**
0x04	Assembly	**43**
0x05	Connection	**43**
0x8F	QCPort Backplane Interface Control	**45**
0x90	QCPort Data Association	**49**
0x91	Assembly/Register Data Association	**50**

Note: A value of [0xYZ] is always a HEX value.

Table 29: DeviceNet Object Common Services

Service Code	Implemented for Class Instance		Service Name
0x0E	Yes	Yes	Get_Attribute_Single
0x10	No	Yes	Set_Attribute_Single
0x18	Yes	No	Get_Member
0x4B	No	Yes	Allocate_Master/Slave_Connection_Set
0x4C	No	Yes	Release_Master/Slave_Conection_Set

Reset Service

To perform a reset on the D77D-DNA, perform a reset service on instance one of the Identity object.

Service – 0x05 Instance – 0x01
Class – 0x01 Data – See Below

Table 30: Reset Actions

Reset Service Data	Action Performed to D77D-DNA and QCPort
0 [0x00]	Simulates performing a power cycle to the D77D-DNA.
1 [0x01]	Causes all Non-Volatile memory attributes to be reset to the factory defaults and simulates a power cycle.
100 [0x64]	Refreshes the data of the currently registered QCPort devices. Causes the current device list in the registry to be updated with the information of the devices WITHOUT any power cycle.
101 [0x65]	Refreshes the data of the currently registered QCPort devices. Causes the current device list in the registry to be updated with the information of the devices AFTER the devices are power cycled.
102 [0x66]	**Soft Configuration** – Erases the QCPort device registry and rebuilds it with information gathered from devices currently on the network.
103 [0x67]	**Hard Configuration** – Erases the QCPort device registry and rebuilds it with information gathered from devices currently on QCPort AFTER each of the devices have their parameters returned to default state.

Identity Object: 0x01 — Instance 0

Table 31: Instance 0

#	Access	Data Type	Name	Description/Value
101 [0x65]	Get	Array of BYTE[16]	Status Indicators	See “Status Indicators” Below

Status Indicators

The **Status Indicators** class attribute is a linear array of bits. Each bit represents the last known status of an instance of Identity. The instance of identity will be FALSE for a non-faulted state of that identity and TRUE for a faulted state of that identity.

Table 32: Instance of Identity

Byte	Bit 7	Bit 6	Bit 5	Bit 4	Bit 3	Bit 2	Bit 1	Bit 0
0	Instance 8	Instance 7	Instance 6	Instance 5	Instance 4	Instance 3	Instance 2	Reserved
1	Instance 16	Instance 15	Instance 14	Instance 13	Instance 12	Instance 11	Instance 10	Instance 9
2	Instance 24	Instance 23	Instance 22	Instance 21	Instance 20	Instance 19	Instance 18	Instance 17
3	Instance 32	Instance 31	Instance 30	Instance 29	Instance 28	Instance 27	Instance 26	Instance 25
4	Instance 40	Instance 39	Instance 38	Instance 37	Instance 36	Instance 35	Instance 34	Instance 33
5	Instance 48	Instance 47	Instance 46	Instance 45	Instance 44	Instance 43	Instance 42	Instance 41
6	Instance 56	Instance 55	Instance 54	Instance 53	Instance 52	Instance 51	Instance 50	Instance 49
7	Instance 64	Instance 63	Instance 62	Instance 61	Instance 60	Instance 59	Instance 58	Instance 57
8	Instance 71	Instance 70	Instance 69	Instance 68	Instance 67	Instance 66	Instance 65	Reserved
9	Instance 79	Instance 78	Instance 77	Instance 76	Instance 75	Instance 74	Instance 73	Instance 72
10	Instance 87	Instance 86	Instance 85	Instance 84	Instance 83	Instance 82	Instance 81	Instance 80
11	Instance 95	Instance 94	Instance 93	Instance 92	Instance 91	Instance 90	Instance 89	Instance 88
12	Instance 103	Instance 102	Instance 101	Instance 100	Instance 99	Instance 98	Instance 97	Instance 96
13	Instance 111	Instance 110	Instance 109	Instance 108	Instance 107	Instance 106	Instance 105	Instance 104
14	Instance 119	Instance 118	Instance 117	Instance 116	Instance 115	Instance 114	Instance 113	Instance 112
15	Instance 127	Instance 126	Instance 125	Instance 124	Instance 123	Instance 122	Instance 121	Instance 120

Each instance will represent one device on a QCPort system with the first instance (instance 2) being the first logical device in the D77D-DNA scan list. Each D77D-DNA scan list is capable of connecting to 63 devices, therefore the **Status Indicators** attribute will hold the status for each QCPort device on a fully loaded D77D-DNA (126 devices). CHA devices will be represented in bits 1 to 63 and CHB devices will be represented in bits 65 to 127.

An example of a scan list and the corresponding instances is described in the following figure.

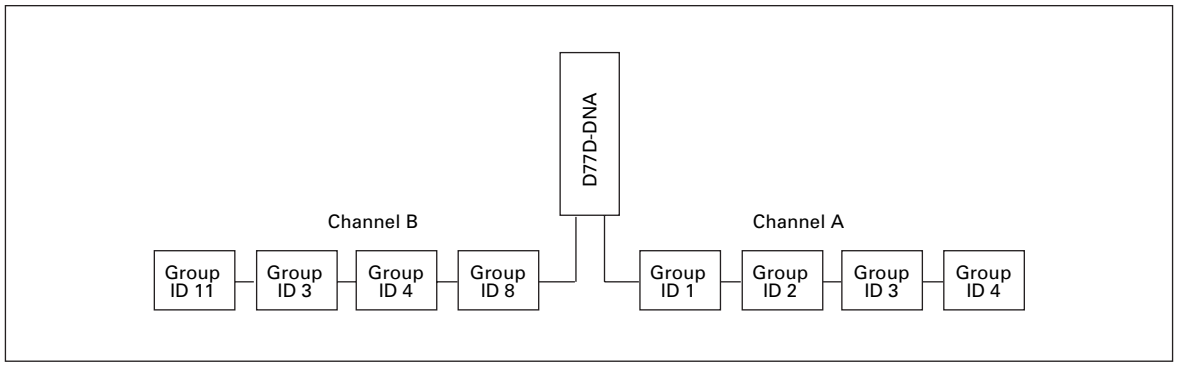

Figure 29: Scan List Example

On each channel there are 4 devices, on one channel the devices start at Group ID 1 and sequentially increment by one, on the other channel the devices do not start at 1 and are not sequential. When a scan list is created, corresponding instances will be created to represent the scan list. The scan list will be the following.

Table 33: Example Scan List

Channel	Group ID	Instance
A	1	2
A	2	3
A	3	4
A	4	5
B	3	65
B	4	66
B	8	67
B	11	68

Within each of the instances of Identity will be data that represents that device including serial number, firmware version, product name and many more. Please refer to the Identity Class Instance 2 – 127 on **Page 41**.

The Status Indicators attribute will represent the current configuration as follows.

Byte	Bit 7	Bit 6	Bit 5	Bit 4	Bit 3	Bit 2	Bit 1	Bit 0	
0	0	0	0	ID 4	ID 3	ID 2	ID 1	0	Channel A
1	0	0	0	0	0	0	0	0	
8	0	0	0	ID 11	ID 8	ID 4	ID 3	0	Channel B
9	0	0	0	0	0	0	0	0	

Identity Object: 0x01 — Instance 1

Table 34: Instance 1

#	Access	Data Type	Name	Description/Value
1 [0x01]	Get	UINT	Vendor ID	Identification of each vendor by number The constant 68.
2 [0x02]	Get	UINT	Device Type	Indication of general type of product The constant 102.
3 [0x03]	Get	UINT	Product Code	Identification of a particular product of an individual vendor; 4096 [0x1000]
4 [0x04]	Get	STRUCT of:	Revision	Revision of the item the Identity Object represents The QCPort device's Firmware revision will be visible in this attribute.
		USINT	Major Revision	
		USINT	Minor Revision	
5 [0x05]	Get	WORD	Status	Summary status of device See "**Status**" on **Page 39**
6 [0x06]	Get	UDINT	Serial Number	Serial number of device
7 [0x07]	Get	SHORT_ STRING	Product Name	Human readable identification
8 [0x08]	Get	USINT	State	Present state of the device as represented by the state transition diagram 0 = Nonexistent 1 = Device Self Testing 2 = Standby 3 = Operational 4 = Major Recoverable Fault 5 = Major Unrecoverable Fault
9 [0x09]	Get	UINT	Configuration Consistency Value	
102 [0x66]	Get	Struct of	Earliest Significant Error	
		USINT		Class ID
		USINT		Instance ID
		USINT		Error Code; see **Table 36** on **Page 40**
		USINT		Additional Code
103 [0x67]	Get	UINT	QCPort Device Adrs	QCPort Device ID
104 [0x68]	Get	UINT	CH Vendor ID	1 = Cutler Hammer
105 [0x69]	Get	Semaphore	Structure Of	Access Synchronization Semaphore
		Client Electronic Key	UINT	Vendor Number
			UDINT	Client Serial Number
		Semaphore Timer	ITIME	Millisecond Timer
176 [0xB0]	Get/Set	SHORT_ STRING	User Label (Tag Name)	User Defined ASCII string of 16 characters. Must perform an apply Service [0x0D] to QCPort Backplane Object [0x8F] Instance 0x01 to save to nonvolatile memory.
178 [0xB2]	Get	USINT	Internal State Variable	

Table 35: Status — Instance 1 to 127

This attribute represents the current status of the entire device. Its value changes as the state of the device changes. The Status attribute is a WORD, with the following bit definitions:

Bit(s):	Called:	Definition
0	Owned	0
1		Reserved, set to 0
2	Configured	0 = No device attached to instance 1 = Valid device attached to instance
3		Reserved, set to 0
4	Reserved	Set to zero.
5	User Fault	This bit is set when some type of fault condition exists that is caused by a user's actions. For the D77D-DNA – this bit shall be set TRUE (1) if a configuration error is detected.
6	Device Fault	This bit is set when some type of fault is known to exist with respect to the QCPort device associated with this instance of Identity.
7	System Fault	This bit is set when some system wide systemic fault exists with respect to the QCPort device identified by this instance of Identity.
8	Minor Recoverable Fault	TRUE indicates the device detected a problem with itself, which is thought to be recoverable. The problem does not cause the device to go into one of the faulted states.
9	Minor Unrecoverable Fault	TRUE indicates the device detected a problem with itself, which is thought to be unrecoverable. The problem does not cause the device to go into one of the faulted states.
10	Major Recoverable Fault	TRUE indicates the device detected a problem with itself, which caused the device to go into the "Major Recoverable Fault" state.
11	Major Unrecoverable Fault	TRUE indicates the device detected a problem with itself, which caused the device to go into the "Major Unrecoverable Fault" state.
12, 13		Reserved, set to 0
14, 15		Reserved, set to 0

Table 36: Error Code: Instance 1

Code	Description
0	NO Fault
51	Too Many Devices on Channel A
52	Too Many Devices on Channel B
53	Duplicate Group ID on Channel A
54	Duplicate Group ID on Channel B
55	Device Fail to Respond on Channel A
56	Device Fail to Respond on Channel B
57	Device Configuration CRC on Channel A
58	Device Configuration CRC on Channel B
59	Scan Fail to Respond on Channel A
60	Scan Fail to Respond on Channel B
61	Configuration Error on Channel A
62	Configuration Error on Channel B
66	OS Mailbox Fault
67	Duplicate Group ID
68	Invalid Group ID
69	Power Fail
72	No QCPort Devices Found
73	Too Much Consumption Data
74	Too Much Production Data
75	FRAM Read Timeout Fault
76	FRAM Read Status Timeout Fault
77	FRAM Wire Enable Timeout Fault
78	FRAM Write Status Timeout Fault
79	FRAM Write Timeout Fault
80	FRAM SPI Wait Timeout Fault
81	Critical Internal System Fault
82	Max Fault

Identity Object: 0x01 — Instance 2 to 127

Table 37: Instance 2 to 127

Secondary instances of the Identity Object are used to publicize the identity of each device "discovered" on QCPort.

#	Access	Data Type	Name	Description/Value
1 [0x01]	Get	UINT	Vendor ID	Identification of each vendor by number The constant 68.
2 [0x02]	Get	UINT	Device Type	Indication of general type of product The constant 102.
3 [0x03]	Get	UINT	Product Code	Identification of a particular product of an individual vendor. See **Table 38** on **Page 42**.
4 [0x04]	Get	STRUCT of:	Revision	Revision of the item the Identity Object represents The QCPort device's Firmware revision will be visible in this attribute.
		USINT	Major Revision	
		USINT	Minor Revision	
5 [0x05]	Get	WORD	Status	Summary status of device See "**Status**" in Instance 1 of the Identity Object
6 [0x06]	Get	UDINT	Serial Number	Serial number of device
7 [0x07]	Get	SHORT_ STRING	Product Name	Human readable identification
8 [0x08]	Get	USINT	State	Present state of the device as represented by the state transition diagram 0 = Nonexistent 1 = Device Self Testing 2 = Standby 3 = Operational 4 = Major Recoverable Fault 5 = Major Unrecoverable Fault
9 [0x09]	Get	UINT	Configuration Consistency Value	
102 [0x66]	Get	Struct of	Earliest Significant Error	
		USINT		Class ID
		USINT		Instance ID
		USINT		Error Code; see See **Table 39** on **Page 42**.
		USINT		Additional Code
103 [0x67]	Get	UINT	QCPort Device Adrs	QCPort Device ID
104 [0x68]	Get	UINT	CH Vendor ID	1 = Cutler Hammer
105 [0x69]	Get	Semaphore	Structure Of	Access Synchronization Semaphore
		Client Electronic Key	UINT	Vendor Number
			UDINT	Client Serial Number
		Semaphore Timer	ITIME	Millisecond Timer
176 [0xB0]	Get	SHORT_ STRING	User Label (Tag Name)	User Defined ASCII string of 16 characters
178 [0xB2]	Get	USINT	Internal State Variable	

Table 38: Product Code — Instance 2 to 127

Product Code	Catalog Number	Description
0x1000	D77D-DNA	D77D-DNA
0x8001	D77A-DI8	8 Pt DC Sink/Source Input
0x8002	D77A-DQ8	8 Pt DC MOSFET Sink Output
0x8003	D77A-IA8	8 Pt AC Input
0x8004	D77A-AQ8	8 Pt AC SSR Output
0x8005	D77A-RQ8	8 Pt Relay Output
0x8011	D77A-DI8DQ8	8 Pt DC In 6 Pt DC MOSFET Output
0x8012	D77A-DI8RQ8	8 Pt DC In 6 Pt Relay Output
0x8813	D77A-AI8AQ8	8 Pt AC In 6 Pt AC SSR Output
0x8814	D77A-AI8RQ8	8 Pt AC In 6 Pt Relay Out
0x800C	D77A-DI16	16 Pt DC Sink/Source Input
0x800D	D77A-DQ16	16 Pt DC MOSFET Sink Output
0x800E	D77A-AI16	16 Pt AC Input
0x8010	D77A-RQ16	16 Pt Relay Output
0x800F	D77A-AQ16	16 Pt AC SSR Output

Table 39: Error Codes Instance 2 to 127

Code	Description
1	Device Responding Incorrectly
2	CRC Incorrect
3	Device Failure To Respond
4	Duplicate Device ID
5	Device Configuration Error
6	Device Duplicate Group ID
7	Device Application Warning
8	Device Application Fault

DeviceNet Object: 0x03

Table 40: Instance 1

#	Access	Data Type	Name	Description/Value
3 [0x03]	Get/Set	BOOL	BOI	Bus-Off Interrupt
4 [0x04]	Get/Set	USINT	Bus–Off Counter	Number of times CAN went to the bus-off state Range 0 – 255

Assembly Object: 0x04

Table 41: Instance 101 [0x65] (Produced Poll Connection)

#	Access	Data Type	Name	Description/Value
3 [0x03]	Get	ARRAY of BYTES	Data	Data contained with in the poll response

Table 42: Instance 103 [0x67] (Produced Bit Strobe Connection)

#	Access	Data Type	Name	Description/Value
3 [0x03]	Get	ARRAY of BYTES	Data	Data contained with in the bit strobe response

Connection Object: 0x05

Table 43: Instance 1 (Explicit Connection)

#	Access	Data Type	Name	Value
1 [0x01]	Get	USINT	State	0 = nonexistent 1 = configured 3 = established 4 = timed out
2 [0x02]	Get	USINT	Instance Type	0 = Explicit
3 [0x03]	Get	USINT	Transport Class Trigger	83 (0x53)
4 [0x04]	Get	USINT	Produced Connection Id	10[MAC ID]011
5 [0x05]	Get	USINT	Consumed Connection Id	10[MAC ID]100
6 [0x06]	Get	USINT	Initial Comm Characteristics	21 (0x15)
7 [0x07]	Get	UINT	Produced Connection Size	500
8 [0x08]	Get	UINT	Consumed Connection Size	500
9 [0x09]	Get/Set	USINT	Expected Packet Rate	Timer Resolution of 10 mSec.
12 [0x0C]	Get	USINT	Watchdog Timeout Action	1 = Auto Delete

Table 44: Instance 2 (Poll Message)

#	Access	Data Type	Name	Value
1 [0x01]	Get	USINT	State	0 = nonexistent 1 = configured 3 = established 4 = timed out
2 [0x02]	Get	USINT	Instance Type	1 = I/O Message
3 [0x03]	Get	USINT	Transport Class Trigger	83 (0x53)
4 [0x04]	Get	USINT	Produced Connection Id	01111[MAC ID]
5 [0x05]	Get	USINT	Consumed Connection Id	10[MAC ID]101
6 [0x06]	Get	USINT	Initial Comm Characteristics	1 [0x01]
7 [0x07]	Get	USINT	Produced Connection Size	1 – 128
8 [0x08]	Get	USINT	Consumed Connection Size	1 – 128
9 [0x09]	Get	USINT	Expected Packet Rate	Timer Resolution of 10 mSec.
12 [0x0C]	Get	USINT	Watchdog Timeout Action	1 = Auto Delete

Table 45: Instance 3 (Bit Strobe Message)

#	Access	Data Type	Name	Value
1 [0x01]	Get	USINT	State	0 = nonexistent 1 = configured 3 = established 4 = timed out
2 [0x02]	Get	USINT	Instance Type	1 = I/O Message
3 [0x03]	Get	USINT	Transport Class Trigger	83 (0x053)
4 [0x04]	Get	USINT	Produced Connection Id	00
5 [0x05]	Get	USINT	Consumed Connection Id	00
6 [0x06]	Get	USINT	Initial Comm Characteristics	1 [0x01]
7 [0x07]	Get	USINT	Produced Connection Size	8
8 [0x08]	Get	USINT	Consumed Connection Size	8
9 [0x09]	Get	USINT	Expected Packet Rate	Timer Resolution of 10 mSec.
12 [0x0C]	Get	USINT	Watchdog Timeout Action	1 = Auto Delete

QCPort Backplane Interface Control Object: 0x8F

Table 46: Instance 1 (Channel A)

#	Access	Data Type	Name	Value
1 [0x01]	Get	USINT	State	1 = Determine Mode 2 = Recall Saved Configuration 3 = Restore Saved Configuration 4 = Soft Configure 5 = Factory Reset 6 = Acquire Device Id 7 = Discovery 8 = Discovery Quiet Time 9 = Configuration Gather Request 10 = Setup Slave Addresses 11 = Save Device Id 12 = Set To MIS Mode 13 = Restart Devices 14 = Get Device Id Tags 15 = Save Autoconfig Info 16 = Idle 17 = Wormhole 18 = Wormhole RS232 19 = Wormhole RS232 Passive 20 = Scantrain 21 = Verify Device CRC 22 = Snooper 23 = New 24 = Reset 25 = Faulted
2 [0x02]	Get	UINT	Device ID	Device ID for QCPort
3 [0x03]	Get	USINT	Device ID Source	Source of the Device ID value 0 = Default Value 1 = Switch Value 2 = Set Value
4 [0x04]	Get/Set	USINT	Baud Rate	Enumerated value of QCPort baud setting 2 = 38.4K 3 = 57.6K (default) 4 = 115.2K 5 = 230.4K 6 = 460.8K
5 [0x05]	Get/Set	BOOL	Access Enable	Explicit control of the scanner function on this subnet 1 = Not Enabled 0 = Access Enabled
6 [0x06]	Get	BOOL	Scanner Running	Exposes the activity of the scanner function on the QCPort subnet 0 = Scanner inactive 1 = Scanner active
7 [0x07]	Get/Set	UDINT	Total Transactions	A count of the number of successful message transmissions on the QCPort subnet Default value = 0
8 [0x08]	Get	UDINT	Collision Count	A count of the number of messages detected to have collided on the QCPort subnet Default = 0

Table 46: Instance 1 (Channel A) (Continued)

#	Access	Data Type	Name	Value
9 [0x09]	Get	UDINT	Framing Error Count	A count of the number of framing errors (or equivalent serial peripheral hardware errors) detected in the QCPort subnet traffic Default = 0
10 [0x0A]	Get	UDINT	CRC Error Count	A count of the number of QCPort subnet messages that are invalid due to CRC calculation faults Default = 0
11 [0x0B]	Get	USINT	Expected Devices Identified	Total number of devices in configuration expected to reside on this subnet Default = Configured number based upon instances of Identity
12 [0x0C]	Get	USINT	Actual Devices Identified	Total Number of devices on this QCPort Default = 0
13 [0x0D]	Get	USINT	Expected Devices In Scan	Count of devices configured on this QCPort Default = Configured number based upon attributes in the QCPort Data Association instances
14 [0x0E]	Get	USINT	Actual Devices In Scan	Total number of devices in scan list Default = 0
15 [0x0F]	Get/Set	USINT	Scan Delay	Time to delay between scans on QCPort in milliseconds
17 [0x11]	Get/Set	UINT	Worm Hole Target Device ID	Default value is 65535
18 [0x12]	Get/Set	ARRAY of BYTE	Worm Hole Consumed Message	Message from DeviceNet to QCPort
19 [0x13]	Get	ARRAY of BYTE	Worm Hole Produced Message	Message from QCPort to DeviceNet
20 [0x14]	Get/Set	ARRAY of BYTE	Wormhole Direct Message	Synchronous message from DeviceNet to QCPort with response

Table 47: Instance 2 (Channel B)

#	Access	Data Type	Name	Value
1 [0x01]	Get	USINT	State	1 = Determine Mode 2 = Recall Saved Configuration 3 = Restore Saved Configuration 4 = Soft Configure 5 = Factory Reset 6 = Acquire Device Id 7 = Discovery 8 = Discovery Quiet Time 9 = Configuration Gather Request 10 = Setup Slave Addresses 11 = Save Device Id 12 = Set To MIS Mode 13 = Restart Devices 14 = Get Device Id Tags 15 = Save Autoconfig Info 16 = Idle 17 = Wormhole 18 = Wormhole RS232 19 = Wormhole RS232 Passive 20 = Scantrain 21 = Verify Device CRC 22 = Snooper 23 = New 24 = Reset 25 = Faulted
2 [0x02]	Get	UINT	Device ID	Device ID for QCPort
3 [0x03]	Get	USINT	Device ID Source	Source of the Device ID value 0 = Default Value 1 = Switch Value 2 = Set Value
4 [0x04]	Get/Set	USINT	Baud Rate	Enumerated value of QCPort baud setting 0 = 9600 1 = 19.2K 2 = 38.4K 3 = 57.6K 4 = 115.2K (default) 5 = 230.4K 6 = 460.8K
5 [0x05]	Get/Set	BOOL	Access Enable	Explicit control of the scanner function on this subnet 1 = Not Enabled 0 = Access Enabled
6 [0x06]	Get	BOOL	Scanner Running	Exposes the activity of the scanner function on the QCPort subnet. 0 = Scanner inactive 1 = Scanner active
7 [0x07]	Get	UDINT	Total Transactions	A count of the number of successful message transmissions on the QCPort subnet Default value = 0

Table 47: Instance 2 (Channel B) (Continued)

#	Access	Data Type	Name	Value
8 [0x08]	Get	UDINT	Collision Count	A count of the number of messages detected to have collided on the QCPort subnet Default = 0
9 [0x09]	Get	UDINT	Framing Error Count	A count of the number of framing errors (or equivalent serial peripheral hardware errors) detected in the QCPort subnet traffic Default = 0
10 [0x0A]	Get	UDINT	CRC Error Count	A count of the number of QCPort subnet messages that are invalid due to CRC calculation faults Default = 0
11 [0x0B]	Get	USINT	Expected Devices Identified	Total number of devices in configuration expected to reside on this subnet Default = Configured number based upon instances of Identity
12 [0x0C]	Get	USINT	Actual Devices Identified	Total number of devices on this QCPort Default = 0
13 [0x0D]	Get	USINT	Expected Devices In Scan	Count of devices configured on this QCPort Default = Configured number based upon attributes in the QCPort Data Association instances
14 [0x0E]	Get	USINT	Actual Devices In Scan	Total number of devices in scan list Default = 0
15 [0x0F]	Get/Set	USINT	Scan Delay	Time to delay between scans on QCPort in milliseconds
17 [0x11]	Get/Set	UINT	Worm Hole Target Device ID	Default value is 65535
18 [0x12]	Get/Set	ARRAY of BYTE	Worm Hole Consumed Message	Message from DeviceNet to QCPort Default is NULL string
19 [0x13]	Get	ARRAY of BYTE	Worm Hole Produced Message	Message from QCPort to DeviceNet
20 [0x14]	Get/Set	ARRAY of BYTE	Wormhole Direct Message	Synchronous message from DeviceNet to QCPort with response

QCPort Data Association Object: 0x90

The QCPort Data Association Object is the mechanism that allows the associations between the data produced and consumed by each QCPort device to be positioned within the Data Transfer Buffer.

Table 48: Instance 1 D77D-DNA Poll Response

#	Access	Data Type	Name	Value
1 [0x01]	Get/Set	USINT	Consumed Size	Number of Bytes Consumed by Selected Device ID
2 [0x02]	Get	UINT	Consumed Offset	Offset in Data Buffer
3 [0x03]	Get/Set	USINT	Produced Size	Number of Bytes Produced by Selected Device ID
4 [0x04]	Get	UINT	Produced Offset	Offset in Data Buffer

Table 49: Instance 2 to 64 Channel A

#	Access	Data Type	Name	Value
1 [0x01]	Get/Set	USINT	Consumed Size	Number of Bytes Consumed by Selected Device ID
2 [0x02]	Get	UINT	Consumed Offset	Offset in Data Buffer
3 [0x03]	Get/Set	USINT	Produced Size	Number of Bytes Produced by Selected Device ID
4 [0x04]	Get	UINT	Produced Offset	Offset in Data Buffer

Table 50: Instance 65 to 127 Channel B

#	Access	Data Type	Name	Value
1 [0x01]	Get/Set	USINT	Consumed Size	Number of Bytes Consumed by Selected Device ID
2 [0x02]	Get	UINT	Consumed Offset	Offset in Data Buffer
3 [0x03]	Get/Set	USINT	Produced Size	Number of Bytes Produced by Selected Device ID
4 [0x04]	Get	UINT	Produced Offset	Offset in Data Buffer

The Poll Response can have part or all of Status Indicators, **Page 36**, added between the Input Status Word and the I/O data. To add these bytes, modify attribute 3 of Instance 1 of the QCPort Data Association Object [0x90] from the default of 0 to the number of bytes to be added. For example, if there are 26 QCPort devices connected to the D77D-DNA, the Status Indicators will contain useful data in the first 4 bytes.

Table 51: Example Status Indicators

Byte	Bit 7	Bit 6	Bit 5	Bit 4	Bit 3	Bit 2	Bit 1	Bit 0
0	Instance 8	Instance 7	Instance 6	Instance 5	Instance 4	Instance 3	Instance 2	0
1	Instance 16	Instance 15	Instance 14	Instance 13	Instance 12	Instance 11	Instance 10	Instance 9
2	Instance 24	Instance 23	Instance 22	Instance 21	Instance 20	Instance 19	Instance 18	Instance 17
3	0	0	0	0	0	Instance 27	Instance 26	Instance 25

Note: Once the modification is performed, an Apply to the Backplane Object [0x8F] must be performed to save that information to nonvolatile memory.

Perform an Apply Service to Backplane Object

Apply service – 0x0D
Class – 0x8F

Instance – 0x01

Assembly/Register Data Association Object: 0x91

The Connection Data Association Object is the mechanism that allows the associations between the data produced and consumed by each DeviceNet I/O connection to be positioned within the Data Transfer Buffer.

Table 52: Instance 1

#	Access	Data Type	Name	Value
1 [0x01]	Get	UINT	Poll Consumed Size	Number of Bytes Consumed from Poll Connection Default = 2
2 [0x02]	Get	UINT	Poll Produced Size	Number of Bytes Produced to Poll Connection Default = 2
3 [0x03]	Get	UINT	Bit Strobe Consumed Size	Number of Bytes Consumed from Bit Strobe Connection Default = 8
4 [0x04]	Get	UINT	Bit Strobe Produced Size	Number of Bytes Produced to Bit Strobe Connection Default = 8

IT. Publications and Support

Publications

Table 53: *IT.* Publications

Publication	Description
MN05002001E	***IT.*** D77A I/O Module Products Installation and Users Manual
MN05001001E	***IT.*** QCPort Starter Network Adapter Product (QSNAP) Installation and Users Manual
Pub 4960	***IT.*** Overload Relay Setup and Troubleshooting Guide
Pub 49601	***IT.*** Overload Relay Quick Setup Guide
MN05004001E	***IT.*** DeviceNet Starter Network Adapter Product (DSNAP) Installation and Users Manual
MN05004002E	***IT.*** D77D-DNA Installation and User Manual
Pub 49907	Intelligent Technologies S751 Soft Starter User Manual

For copies of these and other publications contact the Literature Fulfillment Center at 1-800-957-7050.

Company Information

Eaton Electrical Inc. is a global leader in electrical control, power distribution, and industrial automation products and services. Through advanced product development, world-class manufacturing methods, and global engineering services and support, Eaton Electrical® provides customer-driven solutions under brand names such as Cutler-Hammer®, Durant®, Heinemann®, Holec® and MEM®, which globally serve the changing needs of the industrial, utility, light commercial, residential, and OEM markets. For more information, visit **www.eatonelectrical.com**.

Eaton Corporation is a global diversified industrial manufacturer with 2002 sales of $7.2 billion that is a leader in fluid power systems; electrical power quality, distribution and control; automotive engine air management and fuel economy; and intelligent drivetrain systems for fuel economy and safety in trucks. Eaton has 51,000 employees and sells products in more than 50 countries. For more information, visit **www.eaton.com**.

Eaton Electrical
1000 Cherrington Parkway
Moon Township, PA 15108-4312
USA
tel: 1-800-525-2000
www.eatonelectrical.com

EATON | Cutler-Hammer

© 2004 Eaton Corporation
All Rights Reserved
Printed in USA
Publication No. MN05004002E/CPG
January 2004